Miele

Operating and installation instructions
Microwave combination oven

To avoid the risk of accidents or damage to the appliance it is **essential** to read these instructions before it is installed and used for the first time.

en - GB

M.-Nr. 09 610 330

Contents

Warning and Safety instructions 7
Caring for the environment 22
Overview 23
Controls 24
On/Off sensor ⏻ 25
Sensor controls 25
Display 27
Symbols 28
Features 30
Model numbers 30
Data plate 30
Items supplied 30
Accessories supplied and available to order 30
Glass tray 31
Rack with non-tip safety notches 31
Oven controls 35
Safety features 35
System lock 🔒 35
Cooling fan 35
Safety switch-off 35
PerfectClean treated surfaces 36
Using for the first time 37
Basic settings 37
Heating up the oven for the first time 39
Settings 40
Settings overview 40
Calling up the Settings menu 42
To change and save settings 42
Language ⚑ 42
Time 43
Display 43
Clock format 43
Set 43
Date 43
Lighting 44
Display brightness 44
Volume 44
Buzzer tones 44

Keypad tone . . . 44
Units . . . 45
Weight . . . 45
Temperature . . . 45
Quick MW . . . 45
Popcorn . . . 45
Keeping warm . . . 46
Cooling fan run-on . . . 46
Recommended temperatures . . . 47
Recommended power levels . . . 47
Safety . . . 48
System lock . . . 48
Sensor lock . . . 48
Showroom programme . . . 49
Demo mode . . . 49
Factory default . . . 49
Minute minder . . . 50
Using the minute minder . . . 50
To set the minute minder . . . 50
To change the duration set for the minute minder . . . 51
To cancel the duration set for the minute minder . . . 51
Overview of functions . . . 52
Functions which do not use microwave energy . . . 52
Microwave solo . . . 53
Microwave combination programmes . . . 53
Microwave power . . . 54
How it works . . . 54
Power levels . . . 54
Suitable containers for microwave use . . . 55
Suitable containers for microwave use . . . 55
Unsuitable . . . 57
Testing dishes for their suitability . . . 58
Placing the dish in the oven . . . 59
Cover . . . 59
Tips on saving energy . . . 61
Using residual heat . . . 61
Energy save mode . . . 61
Functions without microwave power . . . 62

Contents

Simple operation . . . 62
Cooling fan. . . . 62
Using the oven - further functions . . . 63
Changing the function . . . 63
Changing the temperature. . . . 64
Rapid heat-up . . . 65
Pre-heating the oven. . . . 66
Using the Crisp function (Moisture reduction). . . . 66
Setting the duration . . . 67
Switching off automatically . . . 68
Switching on and off automatically . . . 68
Sequence of a programme that switches on and off automatically . . . 69
Changing an entered cooking time . . . 69
Cancelling cooking . . . 69
Microwave solo ≋ . . . 70
Simple operation . . . 70
Cooling fan. . . . 70
Using the oven - further functions . . . 71
Changing the power level . . . 71
Changing the cooking duration . . . 71
Changing the function . . . 71
Setting further durations . . . 72
Switching on and off automatically . . . 72
Sequence of a programme that switches on and off automatically . . . 73
Changing the set time. . . . 73
Cancelling cooking . . . 73
Microwave combination programmes . . . 74
Simple operation . . . 74
At the end of the cooking duration . . . 75
Cooling fan. . . . 75
Using the oven - further functions . . . 76
Changing the power level . . . 76
Changing the temperature. . . . 76
Using the Crisp function (steam reduction). . . . 77
Changing the function . . . 77
Setting further durations . . . 77
Setting the duration for microwave cooking . . . 77
Quick-MW ◈. . . . 78

Popcorn . . . 79
Automatic programmes . . . 80
Overview of food categories . . . 80
To use an Automatic programme . . . 80
Notes on using these programmes . . . 81
User programmes . . . 82
To create a User programme . . . 82
To start a User programme . . . 84
To change User programmes . . . 84
Change cooking stages . . . 84
Change name . . . 85
To delete User programmes . . . 85
Baking . . . 86
Notes on the baking chart . . . 87
Baking chart . . . 88
Roasting . . . 92
Notes on the roasting chart . . . 93
Food probe . . . 94
How the food probe works . . . 94
When to use it . . . 94
Important notes about using the food probe . . . 95
Using the food probe . . . 96
Time left display . . . 97
Switching between the time remaining and the core temperature displays . . . 97
Using residual heat . . . 97
Roasting chart . . . 98
Low temperature cooking . . . 100
Using the "Low temperature cooking" special application . . . 101
Low temperature cooking - setting the temperature manually . . . 102
Grilling . . . 103
Notes on the grilling chart . . . 103
Grilling chart . . . 106
Microwave defrosting, reheating and cooking . . . 107
Charts for defrosting, reheating and cooking food . . . 110
Chart for defrosting food . . . 111
Chart for reheating food . . . 112
Chart for cooking food . . . 113

Contents

Special applications 114
Defrost 115
Drying food 116
Reheat 117
Prove dough 117
Pizza 118
Heat crockery 118
Gentle bake 119
Sabbath programme 120
Frozen food / Ready meals 121
Note for test institutes 122
Test food acc. to EN 60350 (Function: Microwave solo ≋) 122
Test food acc. to EN 60350 (functions without microwave power) 123
Cleaning and care 124
Unsuitable cleaning agents 124
Tips 125
Normal soiling 125
Stubborn soiling 126
Lowering the top heat/grill element 127
Problem solving guide 128
After Sales / Guarantee 134
Electrical connection 135
Building-in diagrams 136
Appliance and niche dimensions 136
Installation in a tall unit 136
Installation in a base unit 137
Front dimensions 138
Installation 139
Baking recipes 140
Bakes recipes 161
Soup/Casserole recipes 164
Fish recipes 166
Meat recipes 170
Poultry recipes 180
Game recipes 186
Addresses 191

This appliance complies with statutory safety requirements. Inappropriate use can, however, lead to personal injury and damage to property.

To avoid the risk of accidents and damage to the appliance, please read these instructions carefully before using it for the first time. They contain important notes on installation, safety, use and maintenance.

Miele cannot be held liable for non-compliance with these instructions.

Keep these instructions in a safe place and ensure that new users are familiar with the contents. Pass them on to any future owner.

Correct application

▶ This oven is intended for use in domestic households and similar working and residential environments.

▶ The oven is not intended for outdoor use.

▶ It is intended for domestic use only to cook food, and in particular to bake, roast, grill, cook, reheat, defrost and dry food.
Any other use is not supported by the manufacturer and could be dangerous.

▶ Do not use the microwave combination oven to store or dry items which could ignite easily.
If such items were dried in the microwave oven, the moisture in the item would evaporate causing it to dry out and even self-ignite.

▶ People with reduced physical, sensory or mental capabilities, or lack of experience or knowledge who are not able to use the appliance safely on their own must be supervised whilst using it. They may only use it unsupervised if they have been shown how to use it safely and recognise and understand the consequences of incorrect operation.

Safety with children

▶ Children under 8 years of age must be kept away from the appliance unless they are constantly supervised.

▶ Children 8 years and older may only use the oven unsupervised if they have been shown how to use it safely and recognise and understand the consequences of incorrect operation.

▶ Children must not be allowed to clean or maintain the appliance unsupervised.

▶ Please supervise children in the vicinity of the oven and do not let them play with it.

▶ Danger of suffocation. Packaging, e.g. plastic wrappings, must be kept out of the reach of babies and children. Whilst playing, children could become entangled in packaging or pull it over their head and suffocate.

▶ Danger of burning.
Children's skin is far more sensitive to high temperatures than that of adults. External parts of the oven such as the door glass, control panel and the vents become quite hot during use. Do not let children touch the oven whilst it is in use.

▶ Danger of injury
The oven door can support a maximum weight of 8 kg. Do not let children sit on the door, lean against it or swing on it.

Technical safety

▶ Unauthorised installation, maintenance and repairs can cause considerable danger for the user. Installation, maintenance and repairs must only be carried out by a Miele authorised technician.

▶ Never use a damaged oven. It could be dangerous. Check it for visible signs of damage before using it.

▶ Operating a damaged appliance can result in microwave leakage and present a hazard to the user. Do not use the appliance if:

- the door is warped,
- the door hinges are loose,
- holes or cracks are visible in the casing, the door, the door seal or the oven interior walls.

▶ The electrical safety of this appliance can only be guaranteed when correctly earthed. It is essential that this standard safety requirement is met. If in any doubt please have the electrical installation tested by a qualified electrician.

▶ To avoid the risk of damage to the oven, make sure that the connection data on the data plate (voltage and frequency) match the mains electricity supply before connecting the oven to the mains. Consult a qualified electrician if in doubt.

▶ Do not connect the appliance to the mains electricity supply by a multi-socket unit or an extension lead. These do not guarantee the required safety of the appliance (fire hazard).

▶ For safety reasons, this appliance may only be used after it has been built in.

▶ The oven must not be used in a non-stationary location (e.g. on a ship).

▶ Tampering with electrical connections or components and mechanical parts is highly dangerous to the user and can cause operational faults.
Never open the casing of the appliance.

▶ While the appliance is under guarantee, repairs should only be undertaken by a Miele authorised service technician. Otherwise the guarantee is invalidated.

▶ Miele can only guarantee the safety of the appliance when genuine original Miele replacement parts are used. Faulty components must only be replaced by Miele spare parts.

▶ If the connection cable is damaged or if the oven is supplied without a cable, it must be replaced or fitted with a special connection cable by a Miele authorised technician (see "Electrical connection").

▶ During installation, maintenance and repair work, the appliance must be disconnected from the mains electricity supply, e.g. if the oven lighting is faulty (see "Problem solving guide" and "Electrical connection").

▶ In order to function correctly, the oven requires an adequate supply of cool air. Ensure that the supply of cool air is not impaired (e.g. by heat insulation strips in the housing unit). Please also ensure that the cool air supply is not unduly heated by other heat sources such as a solid fuel stove.

▶ If the oven is installed behind a furniture panel (e.g. a door), ensure that the door is never closed whilst the oven is in use. Heat and moisture can build up behind a closed furniture panel and cause subsequent damage to the oven, the housing unit and the floor. Do not close the door until the oven has cooled down completely.

Correct use

⚠ Danger of burning.
The oven becomes hot when in use.
Depending on the function being used, you could burn yourself on the heating elements, oven interior, cooked food or oven accessories.
Wear oven gloves when placing food in the oven, turning or removing it and when adjusting oven shelves etc. in a hot oven.

▶ Due to the high temperatures radiated, objects left near the oven when it is in use could start to burn.
Do not use the oven to heat up the room.

▶ Oil and fat can ignite if overheated. Never leave the oven unattended when cooking with oil and fat. Do not use the oven for deep fat frying.
Never use water to extinguish ignited oil or fat. Switch the oven off immediately and then suffocate the flames by keeping the oven door closed.

▶ Please be aware that durations when using microwave power are often considerably shorter when cooking, reheating and defrosting than when using functions without microwave power. Excessively long cooking times can lead to food drying out and burning or could even cause it to catch fire.
Make sure you keep to recommended grilling times when using the grill. Do not use Microwave solo [≋] for drying items such as flowers, herbs, bread or rolls. Never use functions with the grill for bake-off products such as bread or bread rolls, or for drying flowers or herbs. Use Fan plus [⅄] for these procedures and monitor the process carefully.

▶ If using alcohol in your recipes, please be aware that high temperatures can cause the alcohol to vaporise. The vapour can catch fire on hot heating elements.

▶ When using residual heat to keep food in the oven warm, the high humidity and amount of condensation in the oven can cause corrosion in the oven. The control panel, the worktop or the housing unit can also suffer damage.
Always cover food when using Microwave solo [≋] function. Once food is cooked through, use a lower power for continued cooking to reduce the amount of steam produced from the food.
When using residual heat do not switch the oven off. Instead set the temperature to the lowest setting and leave the oven on the selected function.
The fan will then remain on automatically and dissipate the moisture.

▶ Food which is stored in the oven or left in it to be kept warm can dry out and the moisture released can lead to corrosion damage in the oven.
Always cover food that is left in the oven to keep warm.

▶ A build-up of heat can cause damage to the enamel on the floor of the oven.
When using Conventional heat, Bottom heat, Intensive bake or Fan plus do not line the floor of the oven with anything, e.g. aluminium foil or so-called protective liners. Neither should you place roasting pans or glass trays directly on the oven floor.

▶ It is important that the heat is allowed to spread evenly throughout the food being cooked. This can be achieved by stirring and/or turning the food, and observing a sufficiently long standing time, which should be added to the time needed for cooking, reheating or defrosting.

▶ When heating food and drinks, remember that the heat is created in the food itself, and that the container will normally be cooler. The dish is only warmed by the heat of the food.
Before serving, remember to allow a sufficient standing time and then always check the temperature of the food after taking it out of the microwave oven. The temperature of the container is not an indication of the temperature of the food or liquid in it. **This is particularly important when preparing food for babies, children, and the elderly or infirm.** Shake or stir baby milk and food thoroughly after heating, and try it for temperature to ensure that it will not scald the baby.

▶ The oven is not suitable for cleaning or disinfecting items. Items can get extremely hot and there is a danger of burning when the item is removed from the appliance.

▶ Do not cook or reheat food or liquids in sealed containers, jars or bottles. With baby bottles, the screw top and teat must be removed. Otherwise pressure will build up which can cause the bottle or container to explode, posing a severe risk of injury.

▶ The boiling rod ensures that the liquid heats up evenly with bubbles forming at the right time.

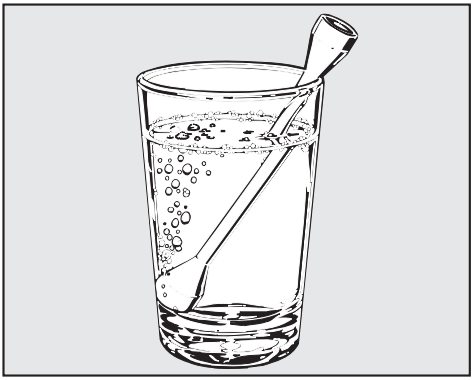

When reheating liquids, always place the boiling rod supplied into the cup or glass.
When boiling and in particular when re-heating liquids, milk, sauces etc, using microwave power without the boiling rod, the boiling point of the liquid may be reached without the production of typical bubbles. The liquid does not boil evenly throughout. This so-called 'boiling delay' can cause a sudden build up of bubbles when the container is removed from the oven or shaken. This can lead to the liquid boiling over suddenly and explosively. Danger of scalding and burning. The formation of bubbles can be so strong that the pressure forces the oven door open, with a danger of injury and damage. The user could be injured and the appliance damaged.

▶ Eggs can be cooked without their shells using microwave power only if the yolk membrane has been punctured several times first. The pressure could otherwise cause the egg yolk to explode.

▶ Eggs in their shells will explode if cooked with microwave power, even after taking them out of the oven.
They can only be cooked in their shells using microwave heat in a specially designed egg-boiling device available from specialist shops. Hard-boiled eggs must not be reheated in the microwave oven either as they too will explode.

▶ Food with a thick skin or peel, such as tomatoes, sausages, jacket potatoes and aubergines, should be pierced or cut in several places to allow steam to escape and prevent the food from bursting.

▶ To check food temperature, first interrupt the cooking process. Only use a thermometer specifically approved for food use to measure the temperature of the food. Do not use a thermometer containing mercury or liquid as these are not suitable for use with very high temperatures and break very easily.

▶ Do not use the oven to heat up cushions or pads filled with cherry kernels, wheat grains, lavender or gel, such as those used in aromatherapy.
These pads can ignite when heated even after they have been removed from the oven.

▶ To avoid fuelling any flames, do not open the oven door if smoke occurs inside the appliance. Interrupt the process by switching the appliance off and disconnect it from the mains electricity supply. Do not open the door until the smoke has dispersed.

▶ Dishes with hollow knobs or handles are not suitable for use with microwave power. Moisture which has gathered in the hollow recesses can cause pressure to build up and the item can explode. If the hollow recess is sufficiently ventilated, the item could be used. However, we recommend that you do not use such dishes in the microwave oven.

▶ Fire hazard. Using Microwave solo [≋] or Microwave combination programmes with plastic dishes which are not microwave safe can cause them to melt and damage the appliance. Do not use any containers or cutlery made from or containing metal, aluminium foil, lead crystal glassware, temperature-sensitive plastics, wooden utensils or cutlery, metal clips or plastic or paper covered wire ties. Do not use bowls with milled rims, or plastic pots with the foil lid only partially removed (see "Suitable containers for microwave use").

▶ For functions without microwave power: plastic containers which are not suitable for use in an oven can melt at high temperatures and can even damage the oven or catch fire. Only use containers which are declared by the manufacturer as being suitable for use in an oven. Follow the manufacturer's instructions on use.

▶ Do not leave the microwave oven unattended when reheating or cooking food in disposable containers made of plastic, paper or other inflammable materials. Before using single-use containers make sure they are suitable for use in microwave ovens. See "Suitable containers for microwave ovens".

▶ Do not reheat food in the oven in heat-retaining bags which are intended for use in normal ovens.
These heat-retaining bags usually contain a thin layer of aluminium foil which reflects microwaves. This reflected energy can, in turn, cause the outer paper covering to become so hot that it ignites.

▶ The oven can suffer damage when using Microwave solo [≋] or Combination programmes if it is empty or incorrectly loaded.
For this reason please do not use functions with microwave power to pre-heat crockery or to dry herbs.
Instead use Fan plus [⅄] or Conventional heat [▭].

▶ Do not bottle or heat up food in closed containers e.g. tins or sealed jars in the oven, as pressure will build up in the container, causing it to explode.

▶ You could injure yourself on the open oven door or trip over it. Avoid leaving the door open unnecessarily.

▶ The door can support a maximum weight of 8 kg.
Do not sit on or lean against an open door, and do not place heavy objects on it. Also make sure that nothing can get trapped between the door and the oven cavity. The oven could get damaged.

Cleaning and care

▶ Do not use a steam cleaning appliance to clean this appliance. The steam could reach electrical components and cause a short circuit.

▶ Scratches on the door glass can result in the glass breaking. Do not use abrasive cleaners, hard sponges, brushes or sharp metal tools to clean the door glass.

▶ Try to avoid the interior walls being splashed with food or liquids containing salt. If it does happen, wipe these away thoroughly to avoid corrosion on the stainless steel surface.

Accessories

▶ Only use genuine original Miele accessories. Using accessories from other manufacturers will invalidate the guarantee, and Miele cannot accept liability.

▶ Only use the Miele food probe supplied with this oven. If it is faulty, it must only be replaced with a suitable original Miele food probe.

Disposal of the packing material

The packaging is designed to protect the appliance from damage during transportation. The packaging materials used are selected from materials which are environmentally friendly for disposal and should be recycled.

Recycling the packaging reduces the use of raw materials in the manufacturing process and also reduces the amount of waste in landfill sites.

Disposing of your old appliance

Electrical and electronic appliances often contain valuable materials. They also contain materials which, if handled or disposed of incorrectly, could be potentially hazardous to human health and to the environment. They are, however, essential for the correct functioning of your appliance. Please do not therefore dispose of it with your household waste.

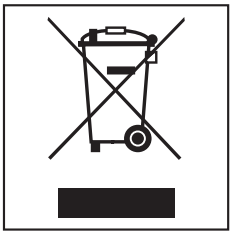

Please dispose of it at your local community waste collection / recycling centre.

Ensure that it presents no danger to children while being stored for disposal.

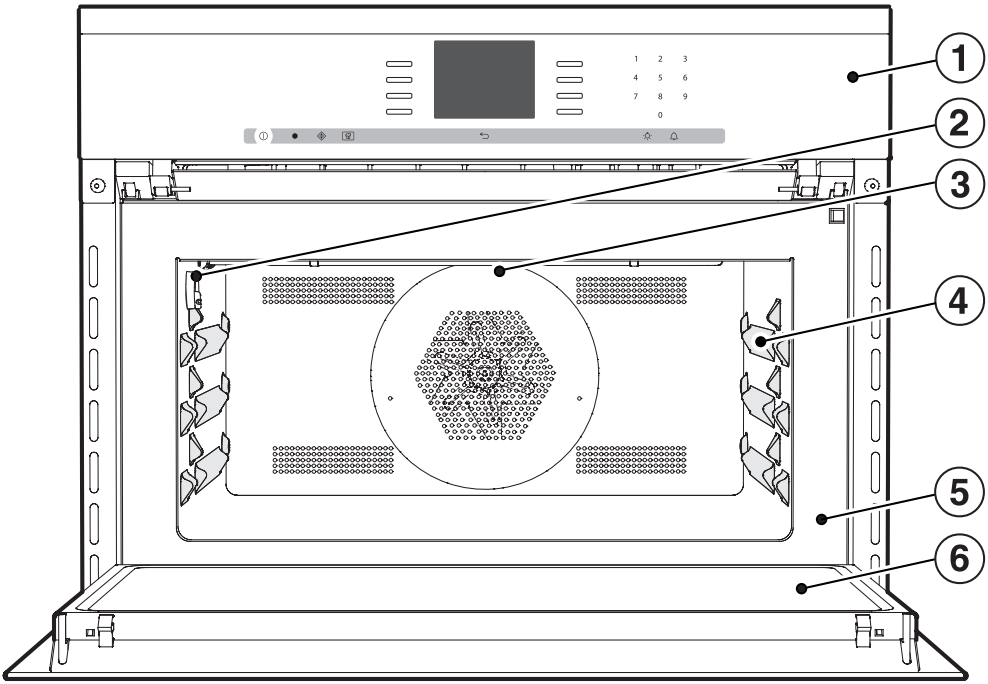

① Controls

② Connection socket for the food probe

③ Top heat/grill element

④ Three shelf levels for the glass tray and rack

⑤ Front frame with data plate

⑥ Door

Controls

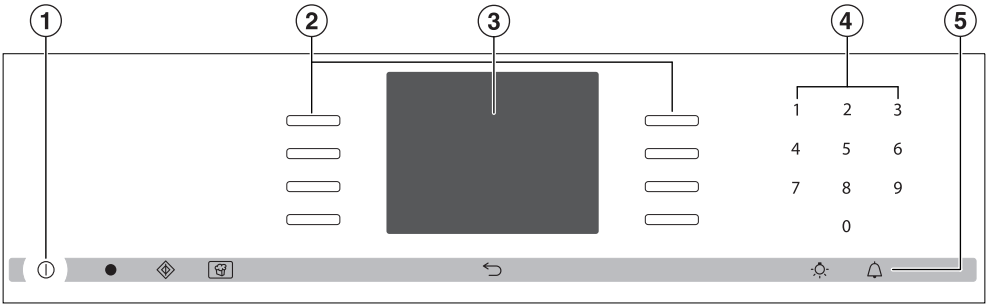

① On/Off sensor ⏻

② ▭ sensors for operating the oven

③ Display

④ 0–9 sensors (numerical keypad)

⑤ ◈, ▣, ⮌, ☼, 🔔 sensors

On/Off sensor ⏻

The On/Off sensor ⏻ is recessed and reacts to touch.

It is used for switching the oven on and off.

Sensor controls

The sensors react to touch. Each touch is confirmed with a keypad tone. This keypad tone can be switched off (see "Settings – Volume – Keypad tone").

Sensor	Function	Notes
⬭	For selecting options and scrolling through the list of options.	Touch the illuminated ⬭ sensor beside the option to select it.
0–9	Numerical keypad for setting values	The numerical keypad is used to set values, e.g. temperatures and durations.
↩	To go back a step	
◈	Quick MW	The oven starts with maximum power 1000 W and a duration of 1 minute (see "Quick MW"). Touching the sensor repeatedly increases the duration in stages. This function can only be used when no other cooking programmes are in use.
	Popcorn	The oven starts with 850 W and a duration of 3 minutes (see "Popcorn"). This function can only be used when no other cooking programmes are in use.

Sensor	Function	Notes
☼	For switching the oven interior lighting on and off	If a list of options is showing in the display or if a cooking process is running, touching ☼ will switch the oven interior lighting on or off. If the display is dark, the ☼ sensor will not react until the oven is switched on. The oven interior lighting switches off after 15 seconds during a cooking process or remains constantly switched on, depending on the setting selected.
🔔	For activating and deactivating minute minder / alarm	If a list of options is showing in the display or if a cooking process is running, you can enter a minute minder duration (e.g. when boiling eggs on the hob) at any point. If the display is dark, the 🔔 sensor will not react until the oven is switched on.

Display

The display is used for showing the time of day or information about functions, temperatures, microwave power levels, cooking durations, automatic programmes and settings. Information or a list of options is shown in the display depending on the function selected.

After switching the oven on with the On/Off sensor ⏻, the main menu will appear:

- Oven functions
- Automatic programmes
- Special applications
- User programmes
- Settings ⚑

If a cooking process is running, selecting "Change" will call up a list of options which can be set or changed for the cooking process in progress.

- Temperature
- Power level
- Core temperature (only when using the food probe)
- Duration
- Ready at
- Start at (only if "Duration"/"Ready at" have been set)
- Heating-up phase (only for some functions)
- Crisp function (Moisture reduction)
- Oven functions

■ Touch the illuminated ⬭ sensor beside the option to select it.

■ Then call up the option, by touching the illuminated ⬭ sensor next to "OK".

Symbols

The following symbols may also appear in the display in addition to the text:

Symbol	Explanation
🔔	Minute minder
-	Allocates an illuminated ⬭ to an option and indicates that the option can be selected.
⁞	If more than four options are available a bar will appear on the right-hand side of the display. Use the allocated sensors to scroll through the list.
·····	The end of a list is indicated by a dotted line. By scrolling down further, you reach the beginning of the list again.
■■■■□□□	Some settings, e.g. display brightness and buzzer volume are selected using a bar chart.
✓	A tick shows that a setting is active. "-" will not appear in front of it and the sensor belonging to it will not be illuminated.
i	This symbol indicates that there is additional information and advice about using the oven. Select "OK" to access the information.
🔒	The system lock is on (see "Settings - Safety). The oven cannot be used.

When a function is selected, the following symbols may appear in the display, depending on setting:

Symbol	Explanation
	Fan plus
	Microwave solo
	Conventional heat
	Intensive bake
	Auto roast
	Bottom heat
	Grill
	Fan grill
	MW * + Fan plus
	MW * + Fan grill
	MW * + Grill
	MW * + Auto roast
	Gentle bake
	Process finished
	Core temperature when using the food probe

* MW = Microwave

Model numbers

A list of the ovens described in these operating instructions can be found on the back page.

Data plate

The data plate is located on the front frame, visible when the door is open.

The data plate states the model number of your oven, the serial number as well as connection data (voltage, frequency and maximum connected load).

Please have this information to hand, should you need to contact Miele regarding any questions or problems.

Items supplied

The oven is supplied with:

- the operating and installation instructions for using the oven and recipes for the Automatic programmes,
- screws for securing your oven in the housing unit,
- various accessories.

Accessories supplied and available to order

This oven is supplied with a glass tray and a rack.

All the accessories listed as well as the cleaning and care products are designed for Miele appliances.

These can be ordered via the internet at www.miele-shop.com, from Miele (see back cover for contact details) or from your Miele dealer.

When ordering, please quote the model number of your oven and the reference number of the accessories required.

Glass tray

The glass tray is suitable for use with all cooking functions.

Always use the glass tray when using the Microwave (Solo) function [≋].

Do not place items weighing more than 8 kg on it.
Do not place the hot glass tray on a cold surface, such as a tiled or granite worktop. The glass tray could get damaged. Use a suitable heat-resistant mat or pot rest.

Rack with non-tip safety notches

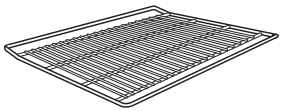

The rack is designed to be compatible with microwaves and so can be used with combination programmes which use microwave power. However it is not suitable for use with Microwave solo [≋].

Danger of burning. The rack gets hot when used with combination programmes which use the microwave function.
Wear oven gloves when placing food in a hot oven and when taking it out.

Do not place the rack directly on the floor of the oven and do not use it with Microwave solo [≋].
This could cause arcing which could damage the oven.

Do not place items weighing more than 8 kg on the rack.

The rack has non-tip safety notches which prevent it being pulled right out when it only needs to be pulled out partially.

When pushing the rack back in, always ensure that the safety notches are at the **back** of the oven (see illustration).

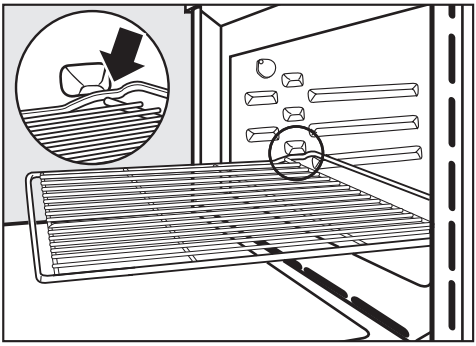

- To remove the rack, lift it upwards slightly at the front when the safety notches connect with the sides of the oven.

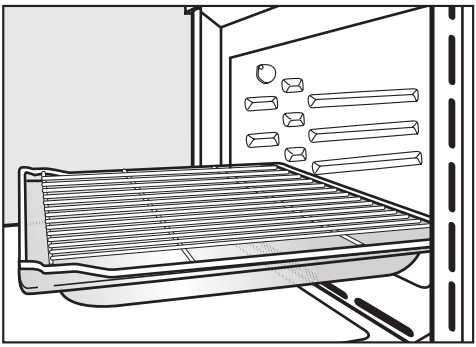

- We recommend using the rack together with the glass tray when cooking items on the rack which might drip.

Boiling rod

The boiling rod helps liquids to heat evenly.

- When reheating liquids, place the boiling rod supplied into the cup or glass.

Food probe

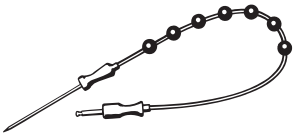

- Using the food probe enables the temperature during the cooking process to be monitored simply and accurately (see "Roasting - Food probe").

Round baking tray HBF 27-1

Do not use the round baking tray with Microwave solo ≋ or with Microwave combination programmes.

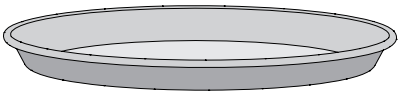

The round baking tray is suitable for cooking pizza, shallow cakes made with yeast or whisked mixtures, sweet and savoury tarts, baked desserts, flat bread, and can also be used for frozen cakes and pizzas.

Place the round baking tray on the rack.

The enamelled surface has been treated with PerfectClean.

HUB oven dishes and HBD oven dish lids

Do not use the gourmet oven dish with Microwave solo ≋ or with Microwave combination programmes.

Miele gourmet oven dishes can be placed on the rack on shelf level 1. They have an anti-stick coating.

The Miele oven dishes are either 22 cm or 35 cm deep. The width and height are the same.

Lids are also available. These are ordered separately.

Depth: 22 cm	**Depth: 35 cm**
HUB61-22 HUB62-22*	HUB61-35**

HBD 60-22	HBD 60-35

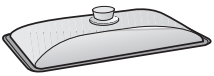

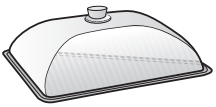

* suitable for use on induction hobs

** Oven dish HUB61-35 cannot be used in conjunction with its lid because the total height of these two items exceeds the height of the cavity.

Miele microfibre cloth

Light soiling and fingerprints can be easily removed with the microfibre cloth.

Miele oven cleaner

Miele oven cleaner is suitable for removing very stubborn soiling. It is not necessary to pre-heat the oven beforehand.

Oven controls

In addition to operating the various cooking functions for baking, roasting and grilling, the oven controls are also used to operate

- the time of day display,
- a minute minder,
- a timer to automatically switch cooking programmes on and off,
- Automatic programmes,
- create User programmes,
- settings that can be customised.

Safety features

System lock 🔒

The system lock prevents the oven from being used unintentionally (see "Settings - System lock 🔒").

The system lock will remain activated even after an interruption to the power supply.

Cooling fan

The cooling fan will come on automatically when a cooking programme is started. The cooling fan mixes hot air from the oven cavity with cool room air before venting it out into the kitchen through vents located between the appliance door and the control panel.

The cooling fan will continue to run for a while after a cooking process to prevent moisture building up in the oven, on the control panel or on the oven housing unit. It will switch itself off automatically after a while.

Safety switch-off

A function **without microwave** can be started without selecting a cooking duration. To prevent over-use and the consequent danger of fire, the oven will switch itself off automatically after a certain length of time. This can be between 1 hour and 12 hours depending on the function and temperature chosen.

If a **combination programme** is followed in quick succession by another programme using microwave power, the magnetron (which produces the microwaves) cannot be switched on again until approx. 10 seconds have elapsed. Therefore wait a short while before starting the second process.

PerfectClean treated surfaces

PerfectClean surfaces have very good non-stick properties and are much easier to keep clean than conventional enamel surfaces, if cleaned regularly.

Food can be taken off these surfaces easily, and soiling from baking and roasting is simple to remove.

Food can be sliced or cut up on PerfectClean surfaces.

However, do not use ceramic knives as these will scratch the PerfectClean surface.

Surfaces treated with PerfectClean enamel can be cleaned as you would clean glass.

Read the instructions in "Cleaning and care" so that the benefits of the non-stick properties and easy cleaning are retained.

The oven compartment and the rack have a PerfectClean finish.

Basic settings

⚠ The oven must not be operated until it has been correctly installed in its housing unit.

The oven will switch on automatically when it is connected to the electricity supply.

Welcome screen

The greeting "Miele Willkommen" will appear in the display, and you will then be requested to select some basic settings which are needed before the appliance can be used.

Follow the instructions in the display.

Set the language

- Scroll through the list until the language you want appears.
- Touch the illuminated ⬭ sensor next to the language you want to select.
- Select "OK".

Select the country

- Scroll through the list until the country you want appears.
- Touch the illuminated ⬭ next to the country you want to select.
- Select "OK".

Set the date

- Use "+" or "–" to set the year, month and day.
- Select "OK" after selecting each setting.

Set the time (of day)

- Use the numerical keypad to set the time of day in hours and minutes (e. g. 1-2-1-5 for 12:15).
- Select "OK".

The time (of day) can be displayed in 12 hour format (see "Settings - Time - Clock format").

Time (of day) display

You will then be asked when you want the time of day to show in the display when the oven is switched off (see "Settings - Time - Display"):

– On
  The time always shows in the display.

– Off
  The display appears dark to save energy. Some functions are limited.

– Night dimming
  The time only shows in the display between 5:00 and 23:00. It switches off at night to save energy.

■ Select they option you want.

■ Select "OK".

Some information about energy consumption will appear in the display.

■ Select "OK".

The message "Set up successfully completed" will appear in the display.

■ Select "OK".

The oven is now ready to use.

If you have selected the wrong language by mistake proceed as described in "Settings - Language ".

Heating up the oven for the first time

New ovens can give off an unpleasant smell on first use. Heating up the oven for at least 1 hour with nothing in it will get rid of this smell.

Ensure that the kitchen is well ventilated during this operation. Close doors to other rooms to prevent the smell spreading throughout the house.

- Remove any stickers or protective foil from the oven and accessories.
- Take the accessories out of the oven and clean them (see "Cleaning and care").
- Before heating the oven up, wipe the interior with a damp cloth to remove any dust or bits of packaging that may have accumulated in the oven compartment during storage and unpacking.
- Switch the oven on.

The main menu will appear.

- Select "Oven functions".
- Select Fan plus .

The recommended temperature will appear (160 °C).

The oven heating, lighting and cooling fan will switch on.

- Use the numerical keypad to set the maximum possible temperature of 250 °C.
- Select "OK".

Heat the empty oven for at least an hour.

After at least an hour:

- Switch the oven off.

After heating up for the first time

⚠ Danger of burning. Allow the oven interior to cool down before cleaning by hand.

- Switch the oven on.
- Clean the oven interior with a clean sponge and a solution of hot water and washing-up liquid or a damp microfibre cloth.
- Dry all surfaces with a soft cloth.
- Switch the oven off.

Leave the oven door open until the oven interior is completely dry.

Settings overview

Settings cannot be altered while a cooking programme is in progress.

Factory default settings are shown in **bold** in the chart.

Setting	Options	
Language	[...] deutsch english [...]	... ... / Deutschland / Luxemburg / ... ... / Australia / United Kingdom / ... ...
Time	Display Clock format Set	On / **Off** / Night dimming **24 h** / 12 h Set the time of day
Date	Set the date	
Lighting	On **"On" for 15 seconds**	
Display brightness	Darker ■■■■□□□ Brighter	
Volume	The volume can be adjusted for the buzzer and keypad tones, or switched off altogether.	
	Buzzer tones	Quieter ■■■■■■■ Louder
	Keypad tone	Quieter ■■■■■■■ Louder
Units	Weight	**g** lb/oz
	Temperature	**°C** °F

Setting	Options	
Quick MW	Power levels Duration	1000 W 1:00 min
Popcorn	Duration	3:00 min
Keeping warm	On **Off**	
Cooling fan run-on	**Temp. controlled** Time controlled	
Recommended temperatures	You can change the recommended temperatures	
Recommended power levels	The recommended power levels can be changed for Microwave solo ≋ and for Microwave combination programmes.	
Safety	System lock Sensor lock	On **Off** On **Off**
Showroom programme	Demo mode	On **Off**
Factory default	Settings User programmes Power level Recommended temperatures	

Calling up the Settings menu

- Select "Settings ⚑" in the main menu.

A list of settings will appear in the display.

You can check them or change them.

A tick ✓ next to an option shows which setting is active.

To change and save settings

- Select "Settings ⚑".
- Scroll through the list until the setting you want appears.
- Touch the sensor next to the setting. The setting you want may need to be selected from a sub menu.
- Change the setting.
- Select "OK".
- Touch ⮌ until the main menu appears or select another setting.

Language ⚑

You can set the language and the country you want.

After selecting and confirming your choice, the language you have selected will appear in the display.

Tip: If you have selected the wrong language by mistake, you can follow the flag symbol ⚑, to get back to the "Language ⚑" menu.

Time

Display

Select how you want the time of day to show in the display when the oven is switched off:

– On
The time always shows in the display.

– Off
The display is switched off to save energy. The oven has be to be switched on before you can use it. This also applies to using the following functions: Quick MW, Popcorn, the Oven lighting and the Minute minder.

– Night dimming
To save energy the time is only shown in the display between 5:00 and 23:00. The rest of the time it is not visible.

Clock format

You can select whether the time shows as a 24 h or 12 h clock.

– 24 h
The time of day is shown in 24 hour clock format.

– 12 h
The time of day is shown in 12 hour clock format.

Set

Set the hours and the minutes.

If there is a power cut, the current time of day will reappear once power has been restored. The time is stored in memory for about 200 hours.

Date

Use the numerical keypad to set the date.

Lighting

– On
  The interior lighting is switched on during the entire cooking period.

– "On" for 15 seconds
  The oven lighting switches off 15 seconds after a programme starts. Pressing ☼ switches it on for another 15 seconds.

Display brightness

The brightness is represented by a bar with seven segments.

■■■■□□□

■ Select "Darker" or "Brighter" to change the brightness of the display.

Volume

Buzzer tones

The volume setting is represented by a bar with seven segments.

■■■■□□□

Maximum volume is selected when all segments are filled.
If none of the segments are filled the volume is switched off.

■ Select "Quieter" or "Louder" to change the volume.

■ Select "On" or "Off" to switch the buzzer tones on or off.

Keypad tone

The keypad tone volume is represented by a bar with seven segments.

■■■■□□□

Maximum volume is selected when all segments are filled.
If none of the segments are filled the volume is switched off.

■ Select "Quieter" or "Louder" to change the volume.

■ Select "On" or "Off" to switch the keypad tone on or off.

Units

Weight

– g
  Weight in Automatic programmes is set using grammes.

– lb/oz
  Weight in Automatic programmes is set using pounds and ounces.

Temperature

– °C
  The temperature is displayed in degrees Celsius.

– °F
  The temperature is displayed in degrees Fahrenheit.

Quick MW

The maximum pre-set power level is 1000 W and the maximum duration is 1 minute.

– Power level
  The following power levels can be selected 80 W, 150 W, 300 W, 450 W, 600 W, 850 W or 1000 W.

– Duration
  The maximum duration that can be set depends on the power level selected.
  80–300 W: maximum 10 minutes
  450–1000 W: maximum 5 minutes.

Popcorn

The power level is pre-set at 850 W and the duration at 3 minutes. This is suitable for most brands of microwave popcorn.

This duration can be altered if necessary. The power level cannot be changed.

– Duration
  The maximum duration that can be set is 4 minutes.

Keeping warm

– On
The warming function is activated as standard with Microwave solo [≋], if a power level of min. 450 W and the cooking duration of min. 10 minutes is selected.
If food is not removed from the oven at the end of a programme, the warming function will automatically start after approx. 5 minutes.
"Keeping warm" will appear in the display and the food will be kept warm for approx. 15 minutes using a power level of 150 W.

– Off
The keeping warm function has been deactivated.

Cooling fan run-on

The cooling fan will continue to run for a while after the oven has been switched off to prevent any humidity building up in the oven, on the control panel or in the oven housing unit.

– Temp. controlled
The cooling fan is switched off when the compartment temperature drops below 70° C.

– Time controlled
The cooling fan switches off after a period of about 25 minutes.

Do not leave food in the oven to keep it warm if you have set the cooling fan to timed controlled operation.
Moisture levels in the oven could increase, leading to condensation forming on the control panel and surrounding kitchen furniture and drops of moisture collecting under the worktop.
Condensate can damage the oven housing unit, damage the worktop and lead to corrosion in the oven.

Recommended temperatures

If you cook with different temperatures a lot it makes sense to change the recommended temperature.

After selecting this option a list of functions will appear in the display.

Select the function you want. The recommended temperature will be highlighted together with the range within which it can be changed.

- Use the numerical keypad to change the recommended temperature.

Recommended power levels

If you cook with different temperatures a lot it makes sense to change the recommended power level.

The recommended power levels can be changed for Microwave solo ≋ and for Microwave combination programmes.

After selecting this option a list of functions will appear in the display together with their recommended power levels.

– Microwave solo ≋:
  80 W, 150 W, 300 W, 450 W, 600 W, 850 W, 1000 W

– Microwave combination programmes:
  80 W, 150 W, 300 W

- Touch the function you want to select it.

- Change the recommended power level if necessary.

Safety

System lock 🔒

The system lock prevents the oven being switched on by mistake.

The system lock will remain activated even after an interruption to the power supply.

Select "On" to activate the system lock

– On
  The system lock is now active. If you want to use the oven touch the sensor next to "OK" for at least 6 seconds.

The minute minder can still be used when the system lock is active.

– Off
  The system lock is not active. You can use the oven as normal.

Sensor lock

The sensor lock prevents the oven being switched off by accident whilst in use.
Once activated, the sensor lock prevents sensors working once a programme has been started.

– On
  The sensor lock is active.
  Touch the sensor next to "OK" for at least 6 seconds to use the sensors again.
  The sensor lock is then deactivated for a short period.

– Off
  The sensor lock is not active. All sensors react to touch as normal.

Showroom programme

This function enables the oven to be demonstrated in showrooms without heating up. It should not be set for domestic use.

Demo mode

– On
  Touch the "OK" sensor for at least 4 seconds to activate demo mode.

If activated, the message "Demo mode active. The appliance will not heat up" will appear in the display when the oven is switched on.

– Off
  Touching the sensor next to "OK" for at least 4 seconds will deactivate Demo mode. You can then use the oven as normal.

Factory default

– Settings
  Any settings that you have altered will be reset to the factory default setting.

– User programmes
  All user programmes will be deleted.

– Power level
  Power levels which have been changed will be reset to the factory default settings.

– Recommended temperatures
  Recommended temperatures which have been changed will be reset to the factory default settings.

Using the minute minder 🔔

The minute minder can be used to time other activities in the kitchen, e.g. boiling eggs.

The minute minder can also be used at the same time as a cooking programme in which the start and finish times have been set, e.g. as a reminder to stir a dish or add seasoning etc.

A maximum minute minder duration of 9 hours, 59 minutes and 59 seconds can be set.

To set the minute minder

Example:
You want to boil some eggs and set a minute minder duration of 6 minutes and 20 seconds.

> If you want to use the minute minder and "Time – Display – Off" has been selected, you will need to switch the oven on before you can set the minute minder. The minute minder can then be seen counting down in the display when the oven is switched off.

- Touch 🔔.

"0:00:00" will appear (h:min:sec).

- Use the numerical keypad to enter a different duration (6-2-0).
- Select "OK".

The minute minder duration is now saved.

The duration counts down in the display when the oven is switched off.

If a cooking programme is being run at the same time the minute minder duration will appear in the bottom of the display.

At the end of the minute minder duration

– 🔔 will flash,

– the display will show the time counting upwards,

– a buzzer will sound if the buzzer volume has been set (see "Settings - Volume - Buzzer tones").

■ Touch 🔔.

The buzzer will stop and the symbols in the display will go out.

To change the duration set for the minute minder

■ Touch 🔔 or the illuminated sensor next to the minute minder duration which is counting down.

The minute minder duration selected appears.

■ Use the numerical keypad to enter a different duration.

■ Select "OK".

The changed minute minder is saved and will count down in seconds.

To cancel the duration set for the minute minder

■ Touch 🔔 or the illuminated sensor next to the minute minder duration which is counting down.

The minute minder duration selected appears.

■ Select "Reset".

The minute minder is now cancelled.

Your oven has a range of oven functions for preparing food.

Functions which do not use microwave energy

Fan plus

This function is used for baking and roasting on different levels at the same time.
A lower temperature can be selected than when using Conventional heat, as the fan distributes the heat to the food straight away.

Auto roast

This is used for roasting at a high temperature and continued cooking at a lower temperature.
During the searing phase the oven heats up to a high temperature (230 °C) to seal the meat and keep it succulent and tasty. As soon as this temperature has been reached, the oven temperature automatically drops back down to the pre-selected temperature for continued roasting.

Grill

For grilling thin cuts (e.g. steaks) and browning baked dishes.

Fan grill

For grilling thicker cuts of meat (e. g. roulades, chicken). Lower temperatures can be used than when using the Grill function, as the fan distributes the heat to the food straight away.

Intensive bake

For baking cakes with moist toppings. Intensive bake is not suitable for baking thin biscuits or for roasting as the juices will become too dark.

Conventional heat

For baking and roasting traditional recipes, preparing soufflés and cooking at low temperatures.

If using an older recipe or cookbook, set the oven temperature for Conventional heat 10 °C lower than that recommended. This will not change cooking times.

Bottom heat

Use this setting towards the end of cooking to brown the base of a cake, quiche or pizza.

Gentle bake

Ideal for cooking bakes and gratins that need to be crispy on top.

Microwave solo

This function is used to rapidly defrost, reheat and cook food

Microwave combination programmes

With Microwave combination programmes the heating element and the magnetron switch on and off alternating one after the other. The heating element browns the food and the magnetron helps it cook quickly.

A maximum microwave power level of 300 W can be used with Microwave combination programmes.

MW + Fan plus

For rapid reheating and cooking of food, browning it at the same time. This combination programme saves the most time and energy.

When baking do not set the microwave power higher than 150 W.

MW + Auto roast

This is used for roasting at a high temperature and continued cooking at a lower temperature.
During the searing phase the oven heats up to a high temperature (230 °C) to seal the meat and keep it succulent and tasty. As soon as this temperature has been reached, the oven temperature automatically drops back down to the pre-selected temperature for continued roasting.

MW + Grill

For grilling thin cuts (e.g. steaks) and browning baked dishes.

The grilling duration is shorter.

MW + Fan grill

For grilling larger items, e.g. rolled meat, poultry.

The grilling duration is shorter.

How it works

In a microwave combination oven there is a high-frequency tube called a magnetron. This converts electrical energy into microwaves. These microwaves are distributed evenly throughout the oven interior, and rebound off the metal sides of the oven interior to reach the food from all sides.

In order for microwaves to reach the food, they must be able to penetrate the cooking utensil being used. Microwaves can penetrate porcelain, glass, cardboard and plastics, but not metal. Do not, therefore, use utensils made of metal, or which contain metal, for example in the form of gold or silver trim. The metal reflects the microwaves and this could cause sparking. The microwaves cannot be absorbed.

Microwaves pass through a suitable container and find their way directly into the food. All food contains moisture molecules which, when subjected to microwave energy, start to oscillate 2.5 thousand million times a second. The friction caused by this vibration creates heat, which first starts developing around the outside of the food and then slowly penetrates towards the centre. The moisture, fat and sugar content of food will affect the speed at which it is cooked. The more water a food contains, the quicker it is to reheat or cook.

As heat is produced directly in the food,

- food can generally be cooked without adding much liquid or cooking oil.
- cooking, reheating and defrosting is quicker than using conventional methods.
- nutrients, such as vitamins and minerals, are generally retained.
- the colour, texture and taste of food are not impaired.

Microwaves stop being produced as soon as the cooking process is interrupted or the appliance door is opened.
When the appliance is in operation, the closed, sealed door prevents microwaves escaping from the appliance.

Power levels

The following power levels can be selected:
80 W, 150 W, 300 W, 450 W, 600 W, 850 W, 1000 W

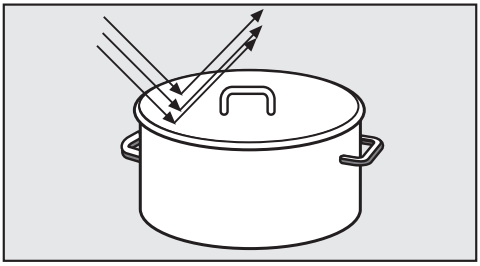

Microwaves are reflected by metal,

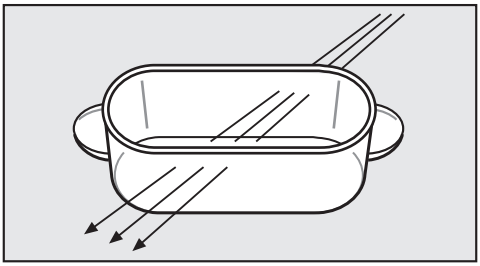

pass through glass, porcelain, plastic and card,

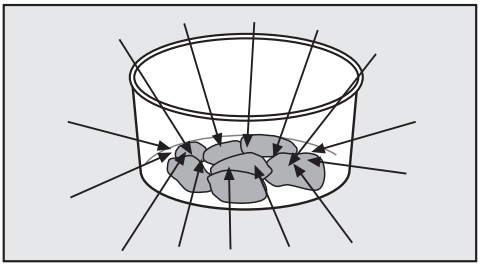

and are absorbed by food.

Fire hazard. Non-microwave safe dishes can suffer damage or damage the oven if used with Microwave solo ≋ or Microwave combination programmes.

The material and shape of the containers used affect cooking results and times.
Heat distribution is more even in round and oval shaped flat containers than in rectangular containers, providing better results.

Suitable containers for microwave use

Glassware

Heat-resistant glass or ceramic glass are ideal for use with microwave power.

Exception: Do not use crystal glass as it contains lead which can crack or shatter in a microwave oven.

Porcelain

Porcelain is a suitable material.

Exception: Do not use porcelain with gold or silver edging or items with hollow knobs or handles, as insufficient ventilation may cause a build-up of pressure.

Earthenware

Decorated earthenware is only suitable if the decoration is beneath an all-over glaze.

Danger of burning. Wear oven gloves when removing earthenware dishes from the oven.

Plastics

Plastic containers and plastic disposable containers may only be used for Microwave solo ≋ if they have been declared as suitable for microwave use by the manufacturer. To protect the environment it is best to avoid using single-use containers.

Do not leave the oven unattended when reheating or cooking food in disposable containers made of plastic, paper or other inflammable materials.

Plastic containers must only be used with Microwave solo ≋. They must not be used with Microwave combination programmes. They must be heat-resistant to a minimum of 110 °C.
Otherwise the plastic may melt and fuse with the food.

– Plastic microwave containers

These are readily available from retail outlets.

– Styrofoam containers

Styrofoam containers can be used for short, timed warming and reheating of food.

– Plastic "Boil-in-the-bag" bags

Plastic boiling bags can be used for cooking and reheating. They should be pierced beforehand so that steam can escape.
This prevents a build-up of pressure and reduces the risk of the bag bursting.There are also special steaming bags available which do not need to be pierced. Please follow instructions given on the packet.

– Roasting bags and tubes

Please follow the manufacturer's instructions when using roasting bags and tubes.

⚠ Do not use metal clips, plastic clips containing metal parts, or paper ties containing wire. There is a danger that they will ignite when heated.

– Melamine containers

Melamine is not suitable for use in this oven. Melamine absorbs microwave energy and gets hot. When purchasing plasticware, make sure that it is suitable for use in a microwave oven.

Unsuitable

⚠ Dishes with hollow knobs or handles are not suitable for use with microwave power. Moisture which has gathered in the hollow recesses can cause pressure to build up and the item can explode. If the hollow recess is sufficiently ventilated, the item could be used. However, we recommend that you do not use such dishes in the microwave oven.

Metal

Metal reflects microwaves and obstructs the cooking process.

- Do not use metal containers, aluminium, foil, metal cutlery and china with metallic decoration such as gold rims or cobalt blue with Microwave combination programmes.

Do not use containers where the foil lid has not been completely removed as small pieces of foil can cause sparking.

Exceptions:

The rack supplied with the oven is suitable for use with all functions that do not use microwave power and with Microwave combination programmes.
The rack should be used on shelf level 1. Do not place it on the oven floor.

- Metal bakeware can be used with microwave combination programmes.
- Ready-meals in aluminium foil trays can be defrosted and reheated using microwave power as long as the lid is removed.

When using foil trays there is a risk of arcing or sparks occurring in the oven. For this reason place the foil tray on the glass tray and not on the rack.

The foil tray must be at least 2 cm away from the oven walls. It must not touch them.

However, as food is only heated from the top it is better to remove the food from the aluminium foil container and transfer it to a dish suitable for use in a microwave oven. The heat distribution will be more even.

– For even defrosting and to avoid overcooking unevenly shaped cuts of meat, poultry or fish, small pieces of aluminium foil may be used to mask wingtips or other thin parts for the last few minutes of the programme.

Make sure that the aluminium foil is at least 2 cm from the oven walls at all times. It must not touch the walls.

– Metal meat skewers or clamps should only be used if they are very small in comparison to the size of the cut of meat.

Glazes and colours

Some glazes and colours contain metal and are therefore unsuitable for microwave functions.

Wood

Wooden dishes are not suitable. Moisture contained in the wood evaporates when exposed to microwave energy, causing the wood to dry and crack.

Testing dishes for their suitability

If in doubt as to whether glass, earthenware or porcelain plates or dishes are suitable for use with microwave energy, a simple test can be performed:

- Place the container in the middle of the glass tray and slide the tray into shelf level 1.
- Close the door.
- Select Microwave solo ≋.
- Set the highest power level (1000 W) and a duration of 30 seconds.
- Start the programme.

At the end of the test, the water in the glass should be hot and the dish cool. If the dish is hot, it would be unwise to use the dish.
If a cracking noise is heard accompanied by sparks during the test, switch the appliance off immediately. Any crockery which causes this reaction is unsuitable for use with microwave power.
If any doubt exists about the suitability of a container, please contact the supplier.

This test cannot be used to check whether items with hollow knobs or handles are suitable for use with microwave power.

Placing the dish in the oven

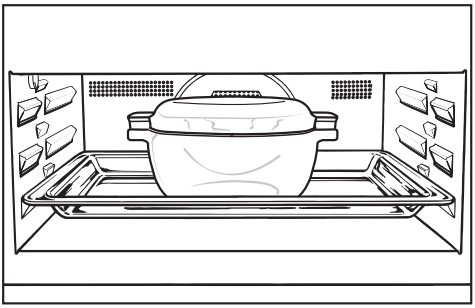

- Insert the glass tray on shelf level 1.
- The dish containing the food should always be placed in the middle of the glass tray.

Placing the food directly on the floor of the oven would give unsatisfactory and uneven results as the microwaves would not be able to reach the food from below.

Cover

A cover:

– prevents too much steam escaping, especially when cooking foods which need longer to cook, such as potatoes.

– speeds up the cooking process.

– prevents food from drying out.

– helps keep the oven interior clean.

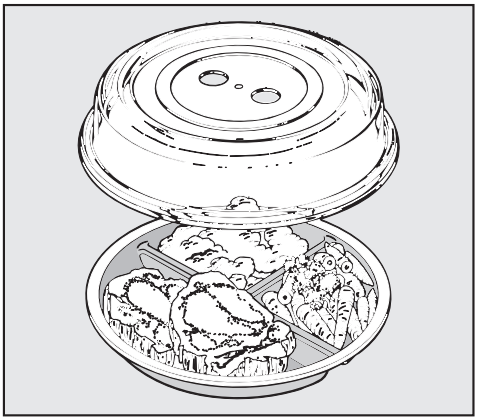

- When using Microwave solo ≋ always cover the food with a lid or cover made of microwave safe glass or plastic.

These are available from retail outlets.

Alternatively, use a clingfilm recommended for use in a microwave oven (pierce as instructed by the manufacturer). Heat can cause normal clingfilm to distort and fuse with the food.

⚠ The cover can only withstand temperatures up to 110 °C.
Higher temperatures (e. g. those used for grilling and Fan plus) can cause the plastic to distort and fuse with the food.
The cover should only be used with Microwave solo ≋.

The cover should not form a seal with the container. If the cover is used with a container which only has a narrow diameter, there might not be enough room for condensation to escape through the holes in the top. The cover could get too hot and could start to melt.

Do **not** use a cover if:

- cooking breaded food,
- cooking food which requires a crisp finish,
- cooking food with a Microwave combination programme.

⚠ Do not cook or reheat food or liquids in sealed containers, jars or bottles. With baby bottles, the screw top and teat must be removed. Otherwise pressure builds up which can cause the bottle or container to explode, posing a severe risk of injury.

- Remove any accessories from the oven that you do not require for cooking.
- Pre-heat the oven only if instructed to do so in the recipe or the cooking chart.
- If possible, do not open the door during a programme.
  If the door is opened during a programme that is not using microwave power, the heat in the oven automatically switches off. The fans continue to operate. As soon as the door is closed again, the programme will continue.
- In general, if a range of temperatures is given, it is best to select the lower temperature and to check the food after the shortest given time.
- Use Fan plus [⅄] as you can cook at temperatures 10–30 °C lower than when using other functions.
- Fan grill [⅄] can be used for a wide variety of food. With Fan grill you can use lower temperatures than with other grill functions which use the maximum temperature setting.
- Your oven will use as little energy as possible if you set the time of day display to "Time - Display - Off".
- In the factory default setting of "Lighting – On for 15 seconds" the oven lighting will switch off automatically after 15 seconds if a programme is running. Touch ☼ at any time to switch the light back on.

Using residual heat

The oven heating will switch off automatically shortly before the end of a cooking process for which an automatic switch-off time has been set or which is using the food probe.

Cooking continues using residual heat. The heat in the oven is sufficient to complete the cooking process.

Energy save mode

The oven will switch itself off automatically to save energy if no other action is taken within a certain time frame after switching it on or after the end of a cooking programme.

The time when this happens will depend on the selected settings (function, temperature and duration).

The time of day will be displayed or the display will remain dark (see "Settings - Time - Display").

Simple operation

■ Switch the oven on.

The main menu will appear.

■ Place the food in the oven.

■ Select "Oven functions".

■ Select the function you want.

Function, recommended temperature and temperature range will appear.

The oven heating, lighting and cooling fan will switch on.

■ Use the numerical keypad to change the recommended temperature if necessary.

> The recommended temperature will be automatically accepted within a few seconds.
> If required, select "Change" to go back to the temperature selection option (see "Changing the temperature").

■ Select "OK".

The required and the actual temperature will appear.

You will see the temperature increasing.
A buzzer will sound when the selected temperature is first reached. See "Settings - Volume - Buzzer tones".

After cooking:

■ Take the food out of the oven.

■ Switch the oven off.

Cooling fan

The cooling fan will continue to run for a while after a cooking process to prevent moisture building up in the oven, on the control panel or on the oven housing unit.

The cooling fan will switch off automatically when the temperature in the oven interior has fallen sufficiently.

You can change this default setting if you wish (see "Settings - Cooling fan run-on).

Using the oven - further functions

You have placed the food in the oven, selected a function and set the temperature.

■ Select "Change".

Further options will appear in the display which you can select or change for your programme:

– Temperature

– Core temperature
(This only appears if you are using the food probe. You cannot set a cooking duration when using the food probe).

– Duration

– Ready at

– Start at
(This will appear after a "Duration" or "Ready at" time has been set).

– Heating-up phase
(This only appears if a temperature of more than 100 °C has been set for Fan plus, Auto roast or Conventional heat).

– Crisp function
(Moisture reduction for making items crispy on the outside or baking deep filled fresh fruit cakes).

– Oven functions
(You can change the cooking function during operation).

Changing the function

You can change the cooking function at any time during operation.

■ Select "Change".

■ Scroll through the list of options until "Oven functions" appears.

■ Select "Oven functions".

■ Select the function you want.

■ Select "OK".

The new function will appear in the display together with its recommended temperature.

■ If necessary, use the numerical keypad to set a temperature for the new function.

■ Select "OK".

The function has been changed.

The times already entered will be kept.

Changing the temperature

As soon as a cooking function is selected, a recommended temperature will appear in the display.

The following recommended temperatures are set at the factory:

Fan plus . . . . . 160 °C (30–250 °C)
Conventional heat . 180 °C (30–250 °C)
Intensive bake . . . . 170 °C (50–220 °C)
Auto roast* . . . . . 160 °C (100–230 °C)
Bottom heat . . . . . 190 °C (100–200 °C)
Grill . . . . . Level 3 (1–3)
Fan grill. . . . . 200 °C (100–220 °C)
Gentle bake . . . . . 190 °C (100–230 °C)

* Initial searing phase temperature approx. 230 °C, continued roasting temperature 160 °C

- If the recommended temperature is suitable for your recipe, select "OK".
- If it is not suitable for your recipe, you can change it for this particular cooking programme.

You can also permanently reset the recommended temperature to suit your personal cooking practices. See "Settings - Recommended temperatures".

Example:
You have selected Fan plus and 170 °C and can see the temperature increasing.

You want to reduce the target temperature to 155 °C.

- Select "Change".
- Select "Temperature".

The required temperature is highlighted.

- Use the numerical keypad to select the temperature you want.
- Select "OK".

The altered required temperature is saved.

- Finally, select "OK" if you want to see the actual temperature increasing in the display.

The altered required temperature appears.

Rapid heat-up

Rapid heat-up can be used to speed up the heating up phase.

The Rapid heat-up function switches on automatically if you set a temperature of more than 100 °C for Fan plus, Auto roast and Conventional heat.

> Rapid heat-up should be switched off when cooking pizza and delicate items (e. g. sponge or biscuits). These will get brown too quickly on the top.

You can switch-off "Rapid heat-up" for a relevant cooking process via the "Heating-up phase" option.

Heating-up phase" option

– Rapid
  (Factory default setting)
  The top and ring heating elements come on together with the fan to enable the oven to reach the required temperature as quickly as possible.

– Normal
  Only the heating elements for the oven function selected are switched on (see "Overview of functions").

To switch off the Rapid heat-up function:

- Select "Change".
- Select "Heating-up phase".
- Select "Normal".
- Select "OK".
- Finally, select "OK" if you want to see the actual temperature increasing in the display.

"Heating-up" will appear in the display instead of "Rapid heat-up".

Pre-heating the oven

It is only necessary to pre-heat the oven in a few instances.

Most dishes can be placed in a cold oven. They will then make use of the heat produced during the heating-up phase.

Pre-heat the oven when using:

Fan plus
- dark bread dough,
- beef sirloin joints and fillet.

Conventional heat
- cakes and biscuits with a short baking time (up to 30 minutes)
- delicate mixtures (e.g. sponges)
- dark bread dough,
- beef sirloin joints and fillet.

■ Select the required oven function and the temperature.

■ Rapid heat-up should be switched off when baking pizza, biscuits and small cakes.

■ Wait for heating-up to finish.

A buzzer will sound when the set temperature is reached as long as the buzzer is set (see "Settings - Volume - Buzzer tones").

■ Place the food in the oven.

Using the Crisp function (Moisture reduction)

It is a good idea to use this function when cooking items which are moist on the inside but which should be crispy on the outside, e.g. frozen chips, croquettes or pork with crackling.

It is also suitable for deep filled fresh fruit cakes, such as plum or apple cake.

> You can activate the "Crisp function" with any function. For best results, activate it at the beginning of the cooking process.

You have placed the food in the oven, selected a function and set the temperature.

■ Select "Change".

■ Scroll through the list of options until "Crisp function" appears in the display.

■ Select "Crisp function".

■ Select "On".

■ Select "OK".

Moisture reduction is now activated.

Setting the duration

You have placed the food in the oven, selected a function and set the temperature.

You can set the programme to switch on or on and off automatically by setting "Duration", "Ready at" or "Start at".

– Duration
  Enter the cooking duration you require.
  Once the duration set has elapsed, the heating will switch off automatically.
  The maximum duration which can be set is 12:00 hours.

  A cooking duration cannot be entered if you are using the food probe. When using the food probe, the cooking duration is determined by when the set core temperature is reached.

– Ready at
  Set the time you want cooking to finish at. The oven will switch off automatically at the time you have set.

  A "Ready at" time cannot be entered if you are using the food probe. When using the food probe, the end of the cooking duration is determined by when the set core temperature is reached.

– Start at
  Set the time you want cooking to start at. The oven will switch on automatically at the time you have set.

  "Start at" can only be used together with "Duration" or "Ready at". (Exception: when using the food probe).

Switching off automatically

Example:
It is 11:45. Your food needs 30 minutes to cook and should be ready at 12:15 .

Select "Duration" and set the time to 00:30 h or select "Ready at" and set the time to 12:15.

The oven will switch off automatically after this duration has elapsed or the time set has been reached.

Setting "Duration"

- Select "Change".
- Select "Duration".
- Use the numerical keypad to set the duration (3-0).
- Select "OK".

Setting "Ready at"

- Select "Change".
- Select "Ready at".
- Use the numerical keypad to set the time when food should be ready at (1-2-1-5).
- Select "OK".

Switching on and off automatically

We recommend using automatic switching on and off when roasting. For baking do not delay the start for too long as the cake mixture or dough will dry out, and the raising agents will lose their effectiveness.

To **switch a cooking programme on and off automatically** you have a choice of how to enter the time parameters:

– "Duration" and "Ready at"

– "Duration" and "Start at"

– "Ready at" and "Start at"

Example:
It is 11:30. Your food needs 30 minutes to cook and should be ready at 12:30 .

- Select "Change".
- Select "Duration" and set a time of 00:30 h.
- Select "Ready at" and set the time to 12:30 h.

The "Start at" time will be calculated automatically. "Start at 12:00" will appear in the display.

The oven will switch on automatically when this time is reached.

Sequence of a programme that switches on and off automatically

Up until the start time the function, the selected temperature, "Start at" and the start time will appear in the display.

After the programme has started you can follow the heating-up phase in the display until the required temperature has been reached.

Once this temperature is reached a buzzer will sound, if this option has been switched on (see "Settings - Volume - Buzzer tones").

After the heating-up phase the time remaining will appear in the display.

You can follow the time counting down in the display. The last minute counts down in seconds.

At the end of the programme a buzzer will sound, if this option has been switched on (see "Settings - Volume - Buzzer tones").

The oven heating and lighting will switch off. "Process finished" will appear in the display.

You have the option of saving the programme as a User programme (see "User programmes") or increasing the duration of the programme via "Change". Touch ⮌ to go to the main menu.

During the cooling down phase the cooling fan will continue to run for a while.

Changing an entered cooking time

- Select "Change".

All options that can be changed will appear.

- Select the time you want.
- Use the numerical keypad to set the time.
- Select "OK".

These settings will all be deleted in the event of a power cut.

Cancelling cooking

- Touch ⮌.
- When "Cancel cooking?" appears in the display, select "Yes".

The oven heating and lighting will switch off, and any set times will be deleted.

Simple operation

■ Switch the oven on.

The main menu will appear.

■ Place the food in the oven.

■ Select "Oven functions".

■ Select Microwave solo.

The function, recommended power level and the power level range will appear in the display.

The oven lighting will come on.

■ Change the recommended temperature if necessary.

■ Select "OK".

■ Use the numerical keypad to set the duration.

The maximum duration that can be set depends on the power level selected.

■ Select "OK".

■ Select "Start".

The magnetron, lighting and cooling fan will come on and the cooking programme will start.

The time remaining will then appear in the display. To interrupt cooking at any time touch "Stop".

At the end of the cooking duration

– "Process finished" will appear in the display,

– the cooling fan will continue to run for a while,

– a buzzer will sound if the buzzer is switched on (see "Settings - Volume - Buzzer tones"),

You have the option of saving the programme as a User programme (see "User programmes") or increasing the duration of the programme via "Change". Touch ⮌ to go to the main menu.

■ Take the food out of the oven.

■ Switch the oven off.

Cooling fan

The cooling fan will continue to run for a while after a cooking process to prevent moisture building up in the oven, on the control panel or on the oven housing unit.

The cooling fan will switch off after a set time.

Using the oven - further functions

You have placed the food in the oven, selected a power level and set the duration.

■ Select "Change".

Further options will appear in the display which you can select or change for your programme:

– Ready at

– Start at

– Oven functions
(You can change the cooking function during operation).

Changing the power level

In Microwave solo the recommended power level is set at the factory to 1000 W.

> You can also permanently reset the recommended power level to suit your personal cooking practices. See "Settings - Recommended power levels".

■ Select "Change".

■ Select "Power level".

■ Set the power level.

■ Select "OK".

The programme will restart with the new power level.

Changing the cooking duration

■ Select "Change".

■ Select "Duration".

■ Use the numerical keypad to set the duration.

■ Select "OK" twice.

■ Select "Start".

The programme will restart with the new duration.

Changing the function

You can change the cooking function during operation. See "Functions without microwave power - Changing the function".

Setting further durations

You have placed the food in the oven, selected a power level and set the duration.

You can set the programme to switch off or on and off automatically by setting a "Ready at" or "Start at" time.

– Ready at
  Set the time you want cooking to finish at. The oven will switch off automatically at the time you have set.

  A "Ready at" time cannot be entered if you are using the food probe. When using the food probe, the end of the cooking duration is determined by when the set core temperature is reached.

– Start at
  Set the time you want cooking to start at. The oven will switch on automatically at the time you have set.

Switching on and off automatically

To **switch a cooking programme on and off automatically** you have a choice of how to enter the time parameters:
– "Duration" and "Ready at"
– "Duration" and "Start at"

Example:
It is 11:45. Your food needs 5 minutes to cook and should be ready at 12:30 .

- Use the numerical keypad to set the power level and then the duration (5-0-0).
- Select "Change".
- Select "Ready at".
- Use the numerical keypad to set the time when food should be ready at (1-2-3-0).
- Select "OK" twice.

The "Start at" time will be calculated automatically. "Start at 12:25" will appear in the display.

The oven will switch on automatically when this time is reached.

Sequence of a programme that switches on and off automatically

Up until the start time the function, the selected power level, the duration, "Start at" and the start time will appear in the display.

After starting the time remaining will appear in the display.

You can follow the time counting down in the display.

At the end of the programme a buzzer will sound, if this option has been switched on (see "Settings - Volume - Buzzer tones").

The magnetron and lighting will switch off. "Process finished" will appear in the display.

You have the option of saving the programme as a User programme (see "User programmes") or increasing the duration of the programme via "Change". Touch ⮌ to go to the main menu.

Changing the set time

- Select "Change".

All options that can be changed will appear.

- Select the time you want.
- Use the numerical keypad to set the time.
- Select "OK" twice.
- Select Start if the programme is already running.

These settings will all be deleted in the event of a power cut.

"Start at" or "Ready at" will go out.

- Select "Change".
- Select the time you want.
- Select "Reset".
- Select "OK".
- Select "Start".

The programme will start using the duration set.

Cancelling cooking

- Touch ⮌.

"Cancel cooking?" will appear in the display.

- Select "Yes".

The main menu will appear. Any cooking durations set will be deleted.

- Switch the oven off.

Microwave combination programmes use microwave power with another cooking function (e.g. Fan plus, Auto roast, Grill or Fan grill).This combination enables shorter cooking durations.

Simple operation

- Switch the oven on.

The main menu will appear.

- Place the food in the oven.
- Select "Oven functions".
- Select the function you want.

The function, recommended power level and the power level range will appear in the display.

The oven lighting will come on.

A microwave power level of maximum 300 W can be set for a Microwave combination programme.

- Change the recommended temperature if necessary.
- Select "OK".

The recommended temperature and temperature range will appear.

The following recommended temperatures or levels are set at the factory:

MW + Fan plus . . . . 160 °C (30–220 °C)

MW + Fan grill . . . 200 °C (100–200 °C)

MW + Grill. . . . . Grill level 3 (levels 1–3)

MW + Auto roast* . 160 °C (100–200 °C)

* Initial searing phase temperature approx. 230 °C, continued roasting temperature 160 °C

- Change the recommended temperature if necessary.

Otherwise the recommended temperature will be accepted within a few seconds.

- Select "OK".
- Use the numerical keypad to set the duration.

You can set a maximum duration of 2:00 hours.

- Select "OK".
- Select "Start".

The cooking programme will start. The oven heating and cooling fan will switch on.

The power level, duration and the required and actual temperature will appear.

You will see the temperature increasing.
A buzzer will sound when the selected temperature is first reached. See "Settings - Volume - Buzzer tones".

The time remaining will appear in the display.

At the end of the cooking duration

– "Process finished" will appear in the display,

– the oven heating will switch off automatically,

– the cooling fan will continue to run for a while,

– a buzzer will sound if the buzzer is switched on (see "Settings - Volume - Buzzer tones"),

You have the option of saving the programme as a User programme (see "User programmes") or increasing the duration of the programme via "Change". Touch ⮌ to go to the main menu.

■ Take the food out of the oven.

■ Switch the oven off.

Cooling fan

The cooling fan will continue to run for a while after a cooking process to prevent moisture building up in the oven, on the control panel or on the oven housing unit.

The cooling fan will switch off automatically when the temperature in the oven interior has fallen sufficiently.

You can change this default setting if you wish (see "Settings - Cooling fan run-on).

Using the oven - further functions

You have placed the food in the oven, selected a temperature, a power level and a duration.

■ Select "Change".

Further options will appear in the display which you can select or change for your programme:

– MW Duration

– Ready at

– Start at

– Crisp function
(Moisture reduction for making items crispy on the outside or baking deep filled fresh fruit cakes).

– Oven functions
(You can change the cooking function during operation).

Changing the power level

■ Select "Change".

■ Select "Power level".

■ Set the power level.

■ Select "OK" twice.

The altered power level is now saved and will show in the display.

Changing the temperature

■ Select "Change".

■ Select "Temperature".

■ Use the numerical keypad to select the temperature you want.

■ Select "OK" twice.

The altered required temperature is saved and will show in the display.

Using the Crisp function (steam reduction)

You can activate or deactivate the Crisp function (see "Functions without microwave power - Using the Crisp function (Moisture reduction").

Changing the function

You can change the cooking function during operation. See "Functions without microwave power - Changing the function".

Setting further durations

You can set a procedure to switch on and off automatically (see "Microwave solo ≋ – Setting further durations").

Setting the duration for microwave cooking

You can select how long you want microwave power to be on for at the beginning of a Microwave combination programme. This can be useful e. g. when baking to help the dough rise more efficiently.

- Select "Change".
- Select MW Duration.
- Set the cooking duration.
- Select "OK" twice.

Quick-MW ◈

If you touch the Quick-MW sensor ◈, the oven will start with a set power level and duration, e. g. to reheat a drink.

The maximum pre-set power level is 1000 W and the maximum duration is 1 minute.

You can alter the power level and the duration. The maximum adjustable duration will depend on the power level selected (see "Settings – Quick MW").

This function can only be used when no other cooking programmes are in use.

■ Touch ◈ until the cooking process begins.
Touching it repeatedly increases the duration in set stages.

The time remaining will appear in the display.

You can interrupt the programme at any time by touching "Stop" and then the ⮌ sensor.

At the end of the programme

– "Process finished" will appear in the display,

– a buzzer will sound if the buzzer is switched on (see "Settings - Volume - Buzzer tones"),

– the oven will switch itself off automatically.

If you touch the Popcorn sensor the microwave oven will start with a set power level and duration.

The power level is pre-set at 850 W and the duration at 3 minutes. This is suitable for most brands of microwave popcorn.

The duration can be changed up to a maximum of 4 minutes. The power level cannot be changed (see "Settings – Popcorn").

This function can only be used when no other cooking programmes are in use.

■ Touch until the programme starts.

The time remaining will appear in the display.

You can interrupt the programme at any time by touching "Stop" and then the sensor.

Do not leave the oven unattended during this programme and make sure you follow the instructions on the packaging.

At the end of the programme

– "Process finished" will appear in the display,

– a buzzer will sound if the buzzer is switched on (see "Settings - Volume - Buzzer tones"),

– the oven will switch itself off automatically.

Your oven has a wide range of Automatic programmes to enable you to achieve excellent results with ease. Simply select the appropriate programme for the type of food you are cooking and follow the instructions in the display.

Select "Automatic programmes" in the main menu to call up the Automatic programmes.

Overview of food categories

- Bakes & Gratins
- Baked goods
- Side dishes
- Bread
- Casseroles
- Fish
- Meat
- Game
- Poultry
- Frozen food
- Cook vegetables with MW
- Cook fruit with MW
- Pizza
- Cook soup with MW

To use an Automatic programme

From the main menu:

■ Select "Automatic programmes".

A list of food types will appear in the display.

■ Select the food type you want.

The Automatic programmes available will then appear.

■ Select the Automatic programme that you want.

Each step you need to take before starting the Automatic programme will appear in the display.

Depending on the programme you have selected, further information or prompts will appear regarding

- the roasting or baking dish,
- the shelf level,
- using the food probe,
- the cooking duration.

■ Follow the instructions in the display.

A selection of recipes are listed at the end of this booklet.

Notes on using these programmes

- When using the Automatic programmes the recipes provided are designed as a guide only. You can use them for other similar recipes, including those using different quantities.
- The oven interior needs to be at room temperature before starting an Automatic programme.
- The duration quoted for Automatic programmes is an estimate. It may increase or decrease depending on the programme. When using the food probe the duration will be determined by when the core temperature is reached. The duration, in particular with meat, will vary depending on the initial temperature of the food.
- Some programmes require the addition of liquid during cooking. You will be prompted by a message in the display when this needs to be done (e.g. "Add liquid at ...").
- Some programmes require a pre-heating phase before food is placed in the oven. A prompt will appear to tell you when to add the food.

You can create and save up to 20 of your own programmes.

- Each one can have up to 10 cooking stages. This enables you to save your most frequently used recipes very accurately. Each stage contains a function, temperature and duration or core temperature.
- You can enter the name of the programme for your recipe.

When you next select the programme it will start automatically.

There are different ways of creating a User programme:

- Select "Save" at the end of running an Automatic programme.
- Select "Save" after running a programme with a set duration.

Then name the programme.

To create a User programme

■ Select "User programmes".

To create the first User programme:

The first time you create a User programme "Create programme" will appear in the display.

■ Select "OK".

To create further User programmes:

If User programmes already exist, the programme names will appear with "Edit programmes" underneath them.

■ Select "Edit programmes".

■ Select "Create programmes".

You can now specify the settings for cooking stage 1.
Follow instructions in the display:

■ Select the function you want.

■ Set the required temperature and select "OK".

■ Set the required cooking duration. With some functions you can set the core temperature instead of the duration.

■ Select "OK".

Settings for the 1st cooking stage have now been set.

You can add more cooking stages, for example, if you want to add another cooking function to follow on from the first.

If further cooking stages are required:

- Select "Add cooking stage" and proceed as for the 1st cooking stage.

When you have finished setting the cooking stages:

- Select "Finish programme".

A summary or your settings will appear in the display.

- Check the settings and then select "Accept".

Select "Change" if you want to change your programme. You can change individual cooking stages or add more cooking stages.

You can now save or change your User programme. You can also start it immediately or programme it to switch on or off automatically at a specific time.

- Select "Save".

Finally give the programme a name. The following symbols appear next to the alphabet:

Symbol	Explanation
ABC	Alphabet in upper case
abc	Alphabet in lower case
␣	Space
123	Numerals 0 to 9 and hyphen

- Touch the sensors next to the symbols to highlight the character you want.
- Select "Select".

The letter or number you have selected will appear in the top line of the display.

Any wrongly entered characters can be deleted one after the other by selecting "Delete" or ⮌.

A name can have a maximum of 12 characters.

- Select the rest of the letters or numbers for your programme name.
- Once you have entered the programme name, select "Save".

A message will appear in the display confirming that the name has been saved.

- Select "OK".

To start a User programme

- Place the food in the oven.
- Select "User programmes".

The programme names will appear in the display with "Edit programmes" underneath.

- Select the programme you want.

A list will appear in the display.

– Start now
The programme will start straight away and the oven heating will switch on.

– Start later
This option only appears if you are using the food probe. You can specify when you want the programme to start. The oven heating will switch on automatically at the time you set.

– Start at
You can specify when you want the programme to start. The oven heating will switch on automatically at the time you set.

– Ready at
You can specify when you want cooking to finish. The oven heating will switch off automatically at the time you set.

The option to "Change cooking stages" is described in "To change User programmes".

- Select the option you want.
- Confirm the message regarding which shelf level to use with "OK".

The programme will start according to the specified start or finish time.

To change User programmes

Change cooking stages

Cooking stages in an Automatic programme that you have renamed as a User programme cannot be changed.

- Select "User programmes".

The programme names will appear in the display with "Edit programmes" underneath.

- Select the programme you want.
- Select "Change cooking stages".

You can change the specified settings for a cooking stage or add more cooking stages to the programme.

- Select the cooking stage you want to change or "Add cooking stage".
- Change the programme as you wish (see "To create a User programme").

- Check the settings and then select "Accept".
- Select "Save".
- Change the name if necessary (see "To create a User programme") and select "Save".

Save the changes to your programme.

Change name

- Select "User programmes".

The programme names will appear in the display with "Edit programmes" underneath.

- Select "Edit programmes".
- Select "Change programme".
- Select the programme you want.
- Select "Change name".
- Enter a new name (see "To create a User programme").
- After entering the new name, select "Save".

A message will appear in the display confirming that the name has been saved.

- Select "OK".

The new name for your programme has been saved.

To delete User programmes

- Select "User programmes".

The programme names will appear in the display with "Edit programmes" underneath.

- Select "Edit programmes".
- Select "Delete programme".
- Select the programme you want.
- Confirm the question as to whether the programme should be deleted with "Yes".

The programme has been deleted.

You can delete all User programmes at once (see "Settings - Factory default - User programmes").

Eating food which has been cooked correctly is important for good health.
Only bake cakes, pizza, chips etc. until they are golden. Do not overcook them.

Functions

Fan plus

Ideal for baking biscuits, sponges, choux pastry, puff pastry and filo pastry.

Microwave + Fan plus

Suitable for dough which requires longer baking, such as rubbed in, beaten mixtures and yeast recipes.

The baking duration is shorter.

During baking the microwave power level must not exceed 150 W.

Bakeware

The choice of bakeware depends on the oven function.

– Fan plus:
  Bakeware made of any ovenproof material is suitable. Light-coloured, thin-walled, non-reflective metal tins can be used, but results may not be as good as with dark non-reflective tins.

– Microwave + Fan plus:
  Only use ovenproof dishes suitable for microwave use (see "Suitable containers for microwave use"), such as ovenproof glass or ceramic dishes as these allow microwaves through them.
  Metal containers reflect microwaves so food will only cook from above. Cooking durations would therefore be longer and metal tins could also cause sparking. Place the dish on the glass tray such that it cannot touch the oven walls. If the dish being used causes sparking do not use it for combination cooking again.

Baking parchment

Place chips, croquette potatoes and similar types of food on baking parchment.

Notes on the baking chart

Temperature

As a general rule, select the lower temperature given in the chart.

Baking at temperatures higher than those recommended may reduce the cooking time, but will lead to uneven browning, and unsatisfactory cooking results.

Baking duration

Check if the food is cooked at the end of the shortest time quoted.
To check if a cake is ready, insert a wooden skewer into the centre. It is ready if the skewer comes out clean, without dough or crumbs sticking to it.

Shelf level

- **Fan plus**

– Cakes in baking tins: Shelf level 1

– Flat items (e. g. biscuits, tray bakes): Shelf level 2

– Baking on two levels at once (depending on the depth of the items to be baked):
Shelf levels 1+3 or
Shelf levels 2+3

- **Microwave + Fan plus**

Insert the glass tray on shelf level 1 and place the baking container on it.

Tips

– Set the cooking duration. When baking, the oven should not be set to start a long time off. Otherwise the cake mixture or dough will dry out, and the raising agents will lose their effectiveness.

– Position rectangular tins with the longer side across the width of the oven for optimum heat distribution and even baking results.

Baking chart

Cakes / biscuits					
	[°C]	[min]	[W]	[°C]	[min]
Creamed mixture					
Sponge cake	**140–160**	**60–80**	–	–	–
Ring cake	**150–170**	**65–80**	80	160	60–70
Muffins [1) 2)]	**150–170**	**25–40**	–	–	–
Marble cake (tin)	**150–170**	**60–70**	–	–	–
Fresh fruit cake, with meringue topping (glass tray)[1)]	**150–170**	**35–45**	–	–	–
Fresh fruit cake (glass tray) [1)]	**150–170**	**35–45**	–	–	–
Fresh fruit cake (tin)	**150–170**	**55–65**	80	160	45–60
Flan base [2)]	**150–170**	**30–35**	–	–	–
Biscuits [2)]	**150–170**	**15–30**	–	–	–
Sponge mix					
Sponge cake [2)]	150–170	30–35	–	–	–
Tart / flan base (2 eggs) [2)]	150–170	25–30	–	–	–
Swiss roll [1) 2)]	150–170	20–25	–	–	–
Rubbed in mixture					
Flan base [2)]	150–170	30–38	–	–	–
Streusel cake (glass tray) [1) 3)]	**150–170**	**40–50**	–	–	–
Biscuits [1) 2)]	**150–170**	**20–30**	–	–	–
Cheese cake	150–170	75–85	–	–	–
Apple pie	150–170	65–75	–	–	–
Apricot tart with topping (tin)	150–170	60–70	–	–	–

The data for the recommended function is printed in bold.

Unless otherwise stated, the durations given are for an oven which has not been pre-heated. With a pre-heated oven, shorten durations by up to 10 minutes. Please observe specified temperature ranges, microwave power levels, shelf levels and durations. They take into account the different types of baking tins, amount of cake mixture and baking practices.

In general, if a range of temperatures is given, it is best to select the lower temperature and to check the food after the shortest duration.

[°C]	[min]	[°C]	[min]
150–170	60–80	–	–
160–180	55–70	–	–
160–180	25–40	–	–
160–180	60–70	–	–
160–180	35–45	–	–
170–190	30–40	–	–
160–180	50–60	–	–
170–190	15–20	–	–
160–180	12–20	–	–
160–180	**22–30**	–	–
160–180	**15–20**	–	–
160–180	**15–20**	–	–
170–190	20–25	–	–
160–180	35–45	–	–
160–180	12–20	–	–
160–180	55–65	**150–170**	**65–75**
160–180	55–65	**150–170**	**60–70**
160–180	55–65	**150–170**	**60–70**

Fan plus / MW + Fan plus / Conventional heat / Intensive bake

Temperature / Duration / Microwave power level in Combination programmes

1) Use shelf level 2.

2) Pre-heat the oven using Conventional heat

3) With Conventional heat use shelf level 1.

Cakes / biscuits					
	[°C]	[min]	[W]	[°C]	[min]
Yeast mixtures and quark dough					
Streusel cake (glass tray) [1]	**150–170**	**35–45**	–	–	–
Fresh fruit cake (glass tray) [1]	150–170	40–50	**150**	**170**	**35–45**
Gugelhupf	**140–160**	**55–65**	–	–	–
Stollen	**150–170**	**55–75**	–	–	–
White bread	**160–180**	**40–50**	–	–	–
Dark rye bread	**150–170**	**110–130**	–	–	–
Pizza (glass tray) [1] [2]	170–190	40–50	80	180	30–40
Onion cake (glass tray) [1] [2]	150–170	35–40	–	–	–
Apple turnovers [1] [2]	**150–170**	**25–35**	–	–	–
Choux pastry, Eclairs [1]	**160–180**	**30–40**	–	–	–
Puff pastry [1] [2]	**170–190**	**25–35**	–	–	–
Meringues, macaroons [1] [2]	**120–140**	**35–45**	–	–	–
Frozen pizza (rack) [1] [2] [3]	**200**	**12–16**	–	–	–

The data for the recommended function is printed in bold.

Unless otherwise stated, the durations given are for an oven which has not been pre-heated. With a pre-heated oven, shorten durations by up to 10 minutes. Please observe specified temperature ranges, microwave power levels, shelf levels and durations. They take into account the different types of baking tins, amount of cake mixture and baking practices.

In general, if a range of temperatures is given, it is best to select the lower temperature and to check the food after the shortest duration.

[°C]	[min]	[°C]	[min]
160–180	30–40	–	–
170–190	40–50	–	–
150–170	45–70	–	–
160–180	55–65	–	–
160–180	35–45	–	–
150–170	110–130	–	–
170–190	30–40	**170–190**	**30–40**
170–190	30–40	**150–170**	**30–40**
160–180	20–25	–	–
–	–	–	–
170–190	15–25	–	–
120–140	28–38	–	–
220	12–16	–	–

Fan plus / MW + Fan plus / Conventional heat / Intensive bake

Temperature / Duration / Microwave power level in Combination programmes

1) Use shelf level 2.

2) Pre-heat the oven using Conventional heat

3) On Conventional heat use shelf level 1.

Functions

Fan plus / Auto roast

Use this programme for roasting meat, fish and poultry that needs to be well browned.

Microwave + Fan plus / Microwave + Auto roast

The programme duration is shorter with these functions.

The following microwave power levels should be used throughout roasting:

– For meat and fish: max. 300 W,

– For poultry: 150 W.

These combination programmes are **not** suitable for roasting sirloin joints or fillet. The centre would be too well cooked before the exterior is browned.

Roasting dishes

Please take into account the material of your bakeware in your choice of oven function:

– Fan plus / Auto roast:
Gourmet oven dishes, oven proof ceramic dishes and glass dishes.

Make sure that the pot and lid have heat-resistant handles.

– Microwave + Fan plus / Microwave + Auto roast:
Dishes must be suitable for use in a microwave oven and must not have metal lids (see "Suitable containers for microwave use").

Pot roasting

We recommend roasting in covered oven dishes. Meat will be tender and there will be sufficient stock for making gravy. The oven also stays cleaner than when roasting on the rack.

- Season the meat and place it in the roasting dish. Dot with butter or margarine or brush with oil if necessary.
For large lean cuts of meat (2-3 kg) and fatty poultry add about 1/8 litre of water to the dish.
- When using a roasting bag, follow the manufacturer's instructions.

Roasting on the rack

Add a little fat or oil to very lean meat or place a few strips of streaky bacon on the top.

Do not add too much liquid during cooking as this will hinder the browning process.

Notes on the roasting chart

Temperature

As a general rule, select the lower temperature given in the chart. If higher temperatures are used, the meat will brown on the outside, but will not be properly cooked through.

For cuts which weigh more than 3 kg, select a temperature approx. 10 °C lower than that given in the roasting chart. Roasting will take longer at the lower temperature, but will be more even.

When roasting on the rack, set a temperature approx. 20 °C lower than for roasting in an oven dish.

Pre-heating

Pre-heating is required when roasting beef sirloin joints and fillet.

Roasting duration

The traditional British method for calculating the roasting time is to allow 15 to 20 minutes per lb/450 grammes, according to type of meat, plus approx. 20 minutes, adjusting the length of time as roasting proceeds to obtain the required result. The roasting time can also be determined by multiplying the thickness of the roast [cm] with the time per cm [min/cm], depending on the type of meat:

Beef/venison: . . . . . 15–18 min/cm

Pork/veal/lamb: . . . . . 12–15 min/cm

Sirloin/fillet: . . . . . 12–15 min/cm

Check if the meat is cooked after the shortest duration quoted.

Shelf level

– Fan plus / Auto roast:
  Rack with meat on it on shelf level 1

– Microwave + Fan plus / Microwave + Auto roast:
  Rack or glass tray with meat on it on shelf level 1

Tips

Browning
Browning only occurs towards the end of the roasting time. Remove the lid about halfway through the roasting time if a more intensive browning result is desired.

Standing time
At the end of the programme, take the roast out of the oven, wrap in aluminium foil and leave to stand for about 10 minutes. This helps retain juices when the meat is carved.

Roasting poultry
For a crisp finish, baste the poultry 10 minutes before the end of the cooking time with slightly salted water.

Food probe

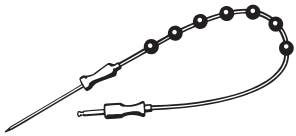

The food probe enables the roasting process to be monitored simply and reliably.

How the food probe works

The metal tip of the food probe is inserted into the food. There is a temperature sensor in the metal tip which measures the core temperature of the food during cooking. The rise in the core temperature reflects the extent to which the food is cooked. You can programme the core temperature to be lower or higher, depending on whether you want your meat to be rare, medium or well done.

The core temperature of up to 99 °C can be set. Please refer to the Roasting chart and "Low temperature cooking" for the core temperatures applicable for different types of meat.

The duration for roasting meat by temperature using the probe is similar to the duration when cooking by time.

When to use it

Apart from Automatic programmes, Special applications and User programmes, the food probe can be used with the following functions:

- Auto roast
- Fan plus
- Conventional heat
- Fan grill
- Microwave solo
- MW + Auto roast
- MW + Fan plus
- MW + Fan grill

Important notes about using the food probe

Please note:

- You can place the meat in a pot, on the rack or in the glass dish, depending on the function selected.
- The metal tip of the food probe must be fully inserted into the centre of the food.
- When cooking poultry, insert the metal tip into the thickest part of the breast. You can find the thickest part of the breast by pressing the area with your thumb and index finger.
- Do not let the metal tip touch any bones or insert it into a particularly fatty area of the meat. If fat or bone come into contact with the probe, this can lead to the oven being switched off too early.
- If the meat is very heavily marbled with fat, select the highest core temperature given in the Roasting chart.
- When using roasting bags or aluminium foil, insert the probe through the bag or foil into the centre of the meat. You can also place the meat, with the food probe inserted, inside the foil. Follow the roasting bag / aluminium foil manufacturer's instructions.

Using the food probe

- Insert the metal tip of the food probe fully into the food.
- Place the food in the oven.

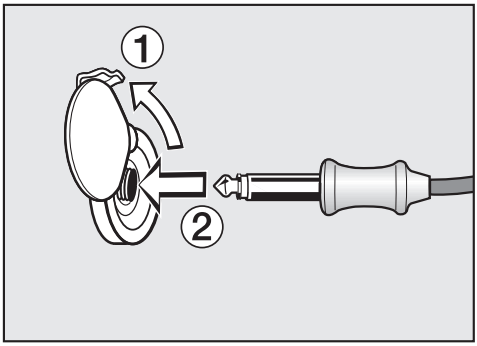

- Insert the plug of the food probe into the socket until you feel it engage.
- Close the door.
- Select the oven function or Automatic programme.
- Set the temperature or power level if necessary.
- Set the core temperature if necessary.

The core temperatures cannot be changed for the Automatic programmes.

You can also delay the start of the cooking programme to a later time. Select the "Start at" option. In Automatic programmes select "Start later".

You can estimate approximately when the food will be ready as the duration of the cooking programme is about the same as if you were cooking food without using the food probe.

You cannot enter a "Duration" or "Ready at" time, as the total cooking duration is determined by how long it takes for the core temperature to be reached.

Time left display

After a certain time, the estimated duration of the cooking process remaining (time left) will appear in the display.

The time remaining is calculated from the cooking temperature selected, the required core temperature and the pattern of the increasing core temperature.

The time remaining first shown is an estimate. As the cooking process continues the time remaining is revised continuously, and a more accurate revised figure shown.

Altering the cooking or core temperature or selecting a different function will delete the time left information.
The time remaining will be recalculated if the door is kept open for a long period of time.

Switching between the time remaining and the core temperature displays

You can switch between the time remaining and core temperature display as soon as the time remaining first appears in the display.

- Select "Change".
- Select Status".
- Select whether you want the time remaining or the core temperature to show in the display and confirm your selection with "OK".

Using residual heat

The heating in the oven switches off shortly before the end of the cooking programme. The residual heat in the oven is sufficient to complete the cooking process.

Using the residual heat in the oven saves energy.

"Energy save phase" will appear in the display to show that the oven is in energy save mode. The measured core temperature is no longer visible.

The cooling fan continues to run, as does the hot air fan if a "fan" setting has been chosen.

When the core temperature selected has been reached,

– "Process finished" will appear in the display,

– a buzzer will sound if the buzzer is switched on (see "Settings - Volume - Buzzer tones"),

If the food is not yet cooked sufficiently, insert the food probe into another place and repeat the programme.

Roasting chart

Meat/Fish		
	[°C] 1) 2)	[min]
Topside of beef, approx. 1 kg	170–190	100–120
Sirloin/fillet 4) 5), approx. 1 kg	190–210	35–60
Haunch of venison (approx. 1 kg)	180–200	100–120
Saddle of venison (approx. 1 kg)	180–200	60–90
Roast pork (Leg, shoulder, neck, approx. 1 kg)	160–180	90–120
Gammon joint, approx. 1 kg	170–190	60–70
Meat loaf 5), approx. 1 kg	160–180	60–70
Veal, approx. 1 kg	160–180	100–120
Leg of lamb, approx. 2 kg	170–190	100–120
Saddle of lamb 4), approx. 2 kg	–	–
Poultry, approx. 1 kg	170–190	50–60
Poultry, approx. 4 kg	160–180	190–210
Fish, whole, approx. 1.5 kg	160–180	40–50

Unless otherwise stated, the durations given are for an oven which has not been pre-heated.

In general, if a range of temperatures is given, it is best to select the lower temperature and to check the food after the shortest duration.

Please observe the temperature range, the microwave power level, the shelf levels and the durations. These also take the type of cooking container, the size of the meat and cooking practices into account.

					3) 6)
[W]	[°C]	[min]	[°C]	[min]	[°C]
–	–	–	180–200	100–120	85–90
–	–	–	200–220	35–60	40–65
–	–	–	190–210	100–120	70–85
–	–	–	190–210	60–90	70–85
150	180	80–90	180–200	100–130	78–90
150	180	50–60	180–200	60–70	70–80
300	180	35–45	180–200	60–70	75–85
150	180	70–80	160–180	100–120	75–80
150	180	80–100	180–200	100–120	75–85
–	–	–	180–200	60–80	70–80
300	180	35–45	180–200	50–60	85
150	160	120–150	180–210	190–210	85
150	170	30–40	180–200	40–50	70–80

Auto roast / MW + Fan plus / Conventional heat

Microwave power level in Combination programmes / Temperature / Duration / Core temperature for food probe

1) Roast in a covered dish.
   When roasting on the rack, set the temperature approx. 20 °C lower than for roasting in a covered oven dish.
2) Do not select a higher temperature than that advised. The meat will become brown, but will not be cooked properly.
3) If the meat is very heavily marbled with fat, select the highest core temperature given in the chart.
4) Do not cover the food.
5) Pre-heat the oven.
6) When using the food probe, enter an appropriate core temperature for the food being cooked.

Low temperature cooking

This method is ideal for cooking beef, pork, veal or lamb when a tender result is required.

First sear the meat all over at a high temperature on the hob in order to seal it.

Then place the meat in the pre-heated oven where the low temperature and long cooking duration will cook it to perfection and ensure it is very tender.

The meat will relax and the juices inside will start to circulate evenly throughout the meat to reach the outer layers. This will give very tender and succulent results.

Tips

- Use lean meat which has been correctly hung and trimmed. Bones should be removed before cooking.
- For searing, use a suitable cooking oil or fat that can withstand high temperatures (e.g. clarified butter, vegetable oil).
- Do not cover meat during cooking.

Cooking takes between 2-4 hours depending on the size and weight of the meat and on how well cooked you want it as well as the level of browning required.

Cooking duration / Core temperatures

Meat	Duration [min]	Core temperature [°C]
Sirloin joint		
– Rare	60–90	48
– Medium	120–150	57
– Well-done	180–240	69
Pork fillet	120–150	63
Gammon*	150–210	68
Saddle of veal*	180–210	63
Saddle of lamb*	90–120	60

* Boned

After cooking

Because the cooking and core temperatures are very low:

- Meat can be carved straight from the oven. It does not need to rest.
- The cooking result will not be affected if the meat is left in the oven after the programme has finished. It can be kept warm until you serve it.
- The meat is an ideal temperature to eat straight away. Serve on pre-heated plates with very hot sauce or gravy to prevent it cooling down too quickly.

Using the "Low temperature cooking" special application

Use the glass tray with the rack placed on top of it.

- Select "Special applications".
- Select "Low temp. cooking".
- Set the temperature.
- Set the core temperature.
- Follow the instructions in the display.

  Place the glass tray and rack in the oven for the pre-heating phase.

- Whilst the oven is pre-heating, sear the meat thoroughly on the hob.

⚠ Danger of burning. Use oven gloves when placing food in the oven, turning or removing it and when adjusting oven shelves etc. in a hot oven.

- As soon as "Use the food probe" appears in the display, place the seared meat on the rack and insert the metal tip of the food probe fully into the centre of the meat.

  Please also refer to the information in "Roasting - Food probe".

- Place the glass tray with the rack on top into the oven on the shelf level quoted.

⚠ Take care: the top heating element / grill element in the oven will be hot. Danger of burning.

- Insert the plug of the food probe into the socket until you feel it engage.
- Close the door.

At the end of the programme, "Process finished" will appear in the display and a buzzer will sound if the buzzer is switched on (see "Settings – Volume – Buzzer tones").

If the meat is not cooked to your satisfaction you can cook it for longer.

Low temperature cooking - setting the temperature manually

Use the glass tray with the rack placed on top of it.

Do not use the Rapid heat-up function to pre-heat the oven.

- Place the glass tray with rack on top into the oven on shelf level 1.
- Select Conventional heat ☰ and a temperature of 130 °C.
- Switch Rapid heat-up off by selecting "Change – Heating-up phase – Normal".
- Pre-heat the oven together with the glass tray and the rack for approx. 15 minutes.
- Whilst the oven is pre-heating, sear the meat thoroughly on the hob.

⚠ Danger of burning. Use oven gloves when placing food in the oven, turning or removing it and when adjusting oven shelves etc. in a hot oven.

- Place the seared meat on the rack.
- Select "Change".
- Select "Temperature" and a temperature of 100 °C.
- Continue cooking until the end of the cooking duration.

You can set this procedure to finish automatically (see "Functions without microwave power - Setting the duration").

⚠ Danger of burning.
Grill with the oven door closed. If you grill with the door open, hot air will escape from the oven instead of being cooled by the cooling fan. The controls will get hot.

Functions

Grill

For grilling thin cuts e.g. steak, burgers or toast.

Fan grill

For grilling thicker items, e.g. rolled meat, poultry pieces.

The top heating / grill element and the fan switch on and off alternately.

MW + Grill,
MW + Fan grill

The grilling time is shorter.

During grilling the microwave power level must not exceed 300 W.

Trays and racks

- Grill on the rack.
- Brush the rack with oil and then place the food on the rack.

Notes on the grilling chart

Grill level

– Grill, MW + Grill

Level	Use
3	Thin cuts are cooked quickly when placed close to the grill element.
2	For a lighter, golden finish, e.g. on gratins and bakes.
1	Thicker cuts should be grilled further from the grill.

Temperature

– Fan grill,
MW + Fan grill:

As a general rule, select the lower temperature given in the chart. If higher temperatures are used, the meat will brown on the outside, but will not be properly cooked through.
Thin cuts can generally be grilled at 220 °C, thicker cuts at 180–200 °C.

Pre-heating

Always pre-heat the grill for approx. 5 minutes with the door closed.

Do not set a microwave power level during pre-heating.

Shelf level

- Grill, MW + Grill:
  Use shelf level 2 or 3 depending on the height of the food.
- Fan grill,
  MW + Fan grill:
  Use shelf level 1 or 2 depending on the height of the food.

Grilling duration

- Flat pieces of fish and meat usually take 6–8 minutes per side.
  It is best to grill food of a similar thickness at the same time so that the grilling duration for each item does not vary too greatly.
- Thicker pieces need about 7–9 minutes per side.
- With rolled meat, allow approx. 10 minutes per cm diameter.

Testing to see if cooked

One way of finding out how well a piece of meat has been cooked is to press down on it with a spoon:

Rare:	If the meat gives easily to the pressure of the spoon, it will still be red on the inside.
Medium:	If there is some resistance, the inside will be pink.
Well-done:	If there is very little resistance, it is cooked through.

Check if the meat is cooked after the shortest time quoted.

Tip

If the surface of thicker cuts of meat is cooked but the centre is still raw, continue grilling at a lower temperature setting or use a lower shelf level to allow the food to cook through to the centre.

Preparing food for grilling

Trim the meat. Do not season meat with salt before grilling as this draws the juices out.

Add a little oil to lean meat if necessary. Do not use other types of fat as they can burn and cause smoke.

Clean fish in the normal way. To enhance the flavour, add a little salt or squeeze a little lemon juice over the fish.

Grilling

- Pre-heat the grill for approx. 5 minutes with the door closed.

Do not set a microwave power level during pre-heating.

- Place the food on the rack.
- Select a function, microwave power level and a grill setting for the Grill and MW + Grill functions.
- Select a function, microwave power level and a temperature for the Fan grill and MW + Fan grill functions.

⚠ Danger of burning.
Use oven gloves when placing food in the oven, turning or removing it and when adjusting oven shelves etc. in a hot oven.

- Place the food on the appropriate shelf level (see Grilling chart).
- Close the door.
- Turn the food halfway through cooking.

Grilling chart

Pre-heat the grill for approx. 5 minutes with the door closed. Do not use microwave power whilst pre-heating the oven.

The data for the recommended function is printed in bold.
Check the food after the shortest duration quoted.
Take note of the temperature range, the microwave power level, the shelf levels and the durations. These take the size of the meat and cooking practices into account.

Food to be grilled					
		Level	[min] 1)	[°C]	[min] 1)
Thin cuts					
Steak	2/3 2)	**3**	**18–22**	220	10–16
Kebabs	2	–	–	220	15–20
Chicken kebabs	2	–	–	220	15–20
Escalopes	2/3 2)	–	–	220	14–18
Burgers	2/3 2)	**3**	**20–25**	220	20–25
Sausages	2/3 2)	**3**	**15–20**	–	–
Fish fillet	2/3 2)	**3**	**15–20**	–	–
Trout	2/3 2)	–	–	220	20–25
Toast	2/3 2)	**3**	**2–4**	–	–
Cheese toast	2	**3**	**5–9**	–	–
Tomatoes	2/3 2)	**3**	**10–12**	220	6–8
Peaches	2	**3**	**4–8**	220	7–10
Thicker cuts					
Chicken, approx. 1 kg	1/2 3)	**2**	**50–60**	**180–200** **150 W + 200** 4)	**45–55** **35–45**
Rolled meat, ∅ 10 cm, approx.1.5 kg	1	2	80–100	180–200	80–100
Pork, approx.1kg	1	–	–	**180–200**	**100–120**

Level / Grill / Fan grill / Temperature / Duration

1) Turn the food halfway through grilling.
2) Select the shelf level according to the thickness of the food.
3) With Fan grill use shelf level 2.
4) Select MW + Fan grill.

	Function	/	Suitable for:
Defrosting		80 W	Very delicate foods such as cream, butter, cream and butter cream gateaux, cheese
		150 W	All other types of food
Reheating		450 W	Baby food
		600 W	All types of food; frozen ready-meals which do not need browning.
		850 W	
		1000 W	Drinks
Cooking		850 W Heating up	Casseroles; porridge and rice pudding; frozen foods which do not need browning.
		450 W Continued cooking	
		150 W Simmering	
	Select a Microwave combination programme if you want to shorten cooking durations and have a crisp finish to the dish.		
		300 W + 160–180 °C	Sear using a high temperature to start with, then continue cooking with a lower temperature.
		300 W + 150–170 °C	Ready-meals which need to be browned, e.g. gratins

Microwave solo / MW + Auto roast / MW + Fan plus

Temperature

The duration required depends largely on the nature of the food, the amount and its initial temperature. Food that has been refrigerated, for example, takes longer to reheat than food at room temperature.
Please refer to the relevant charts.

Before defrosting, reheating and cooking

- Place food (including frozen) in a dish that is suitable for microwave use, and cover it.
- Place the dish in the middle of the glass tray on shelf level 1.

The food probe can be used to monitor the temperature when reheating or cooking (see "Roasting - Food probe" in the operating instructions supplied with the appliance).

With Microwave combination programmes

Only use heat-resistant containers which are microwave safe.

A lid is not usually required. Never use a lid with MW + Auto roast and MW + Grill as the food will not brown.

- Place the glass tray on shelf level 2.

Place ready-meals in aluminium foil dishes on the glass tray.

During the defrosting, reheating and cooking process

- Turn or stir the food several times. Stir the food from the outside towards the middle, as food heats more quickly from the outside.

After defrosting, reheating and cooking

Allow the food to stand at room temperature for a few minutes to enable the heat to spread evenly throughout the food.

⚠ After reheating food, especially food for babies and small children, stir the food or shake the container and check that the temperature does not pose any danger. Double check after it has been left to stand. Danger of burning.

⚠ Danger of burning. Be careful when removing dishes from the appliance. Although heat is not normally produced in the container itself by the microwaves (apart from stoneware), heat transfer from the food to the container may be considerable, making the container itself hot.

Always ensure that food is sufficiently cooked or reheated.

If in any doubt that a sufficiently high temperature has been reached, continue cooking or reheating for a little longer.

Ensure that food, such as meat, poultry and fish, are cooked for an appropriate length of time. The food probe can be used to monitor the temperature when reheating or cooking (see "Roasting - Food probe").

Set a core temperature of at least:
70 °C for fish and,
85 °C for poultry.

Tips on reheating

⚠ We do not recommend heating or reheating food or drinks for babies or young children in the microwave oven. Any decision to do this is the responsibility of the user, and should only be done with the utmost care. Pasteurised or sterilised cooked food should be gently heated for 1/2 to 1 minute at 450 W, and tasted to make sure it is not too hot for a baby's palate before serving. When reheating other food or drink, heat to a high temperature and allow to cool to a suitable heat for eating. For formula milk follow the manufacturer's instructions.

Do not cook or reheat food or liquids in sealed containers, jars or bottles. With baby bottles, the screw top and teat must be removed.
Otherwise pressure will build up which can cause the bottle or container to explode, posing a severe risk of injury.

When heating liquids, the boiling rod provided should always be placed in the container.
It helps liquids to heat evenly and make sure the bubble are produced at the right time.

Never reheat hard boiled eggs using Microwave solo ≋ even without the shell. The eggs can explode.

Tips on cooking

Food with a thick skin or peel, such as tomatoes, sausages, jacket potatoes and aubergines, should be pierced or cut in several places to allow steam to escape and prevent the food from bursting.

Eggs can only be cooked in their shells using Microwave solo ≋ in a specially designed egg-boiling device available from specialist shops. Eggs can burst, even after they have been taken out of the oven.

Eggs can be cooked without their shells using microwave power only if the yolk membrane has been punctured several times first.
The pressure could otherwise cause the egg yolk to explode.

Use	Notes
Defrosting large quantities of food at once, e.g. 2 kg fish	The glass tray can be used on shelf level 1 for defrosting food.
Reheating food	Always cover food when reheating it, except when reheating meat/fish coated in breadcrumbs.
Cooking vegetables	Add a little water to vegetables which have been kept stored. Vegetable cooking times depend on the texture of the vegetable. Fresh vegetables contain more water than vegetables which have been stored and usually cook more quickly.
Cooking frozen ready-meals	Deep-frozen, ready-made meals can be defrosted and then reheated or cooked in one process. Follow the instructions on the packet.

Charts for defrosting, reheating and cooking food

The following notes apply to all charts:

- Take note of the recommended microwave power levels, durations and standing times. These take the consistency, the quantity and the initial temperature of the food into account.
- You are generally advised to select the middle duration.
- Place the food on the glass tray and place the glass tray on shelf level 1.

Chart for defrosting food

	Quantity	150 W ⏲ [min]	80 W ⏲ [min]	Standing time [min][1)]
Dairy products				
Cream	250 ml	–	13–17	10–15
Butter	250 g	–	8–10	5–10
Cheese slices	250 g	–	6–8	10–15
Milk	500 ml	14–16	–	10–15
Quark	250 g	10–12	–	10–15
Cakes / Pastry / Bread				
Sponge cake	Qty 1, approx. 100 g	1–2	–	5–10
Sponge cake	300 g	4–6	–	5–10
Fresh fruit cake	Qty 3, approx. 300 g	6–8	–	10–15
Butter cake	Qty 3, approx. 300 g	5–7	–	5–10
Cream cake	Qty 1, approx. 100 g	–	1.5	5–10
	Qty 3, approx. 300 g	–	4–4.5	5–10
Yeast buns, puff pastries	Qty 4	6–8	–	5–10
Fruit				
Strawberries, raspberries	250 g	7–8	–	5–10
Red / blackcurrants	250 g	8–9	–	5–10
Plums	500 g	12–16	–	5–10
Meat				
Minced beef	500 g	16–18	–	5–10
Chicken	1000 g	34–36	–	10–15
Vegetables				
Peas	250 g	8–12	–	5–10
Asparagus	250 g	8–12	–	10–15
Beans	500 g	13–18	–	10–15
Red cabbage	500 g	15–20	–	10–15
Spinach	300 g	12–14	–	10–15

≋ Microwave power / ⏲ Defrosting duration

1) Allow the food to stand at room temperature for a few minutes to enable the heat to spread evenly throughout the food.

Chart for reheating food

Drinks [2]	Quantity	1000 W ⏲ [min]	450 W ⏲ [min]	Standing time [min][1]
Coffee, drinking temperature 60–65 °C	1 cup (200 ml)	00:50–1:10	–	–
Milk, drinking temperature 60–65 °C	1 cup (200 ml)	1–1:50 [3]	–	–
Water, bringing to the boil	1 cup (125 ml)	1–1:50	–	–
Baby bottle (milk)	approx. 200 ml	–	00:50–1 [3]	1
Mulled wine, grog drinking temperature 60–65 °C	1 glass (200 ml)	00:50–1:10	–	–

Food [3]	Quantity	600 W ⏲ [min]	450 W ⏲ [min]	Standing time [min][1]
Baby food (room temperature)	1 jar (200 g)	–	00:30–1	1
Cutlets, roasted	200 g	3–5	–	2
Fish fillet, roasted	200 g	3–4	–	2
Roast meat in gravy	200 g	3–5	–	1
Side dishes	250 g	3–5	–	1
Vegetables	250 g	4–5	–	1
Gravy	250 ml	4–5	–	1
Soup / casserole	250 ml	4–5	–	1
Soup / casserole	500 ml	7–8	–	1

Microwave power / ⏲ Reheating duration

1) Allow the food to stand at room temperature for a few minutes to enable the heat to spread evenly throughout the food.

2) Place the boiling rod supplied into the cup or glass.

3) Durations assume food is approx. 5 °C to start with.

For food not normally refrigerated, durations assume food is at room temperature or approx. 20 °C.

With the exception of baby food and delicate whisked sauces food should be reheated to a temperature of 70–75 °C.

Chart for cooking food

	Quantity	850 W ⏲ [min]	+	450 W ⏲ [min]	Standing time[1)] [min]
Meat					
Meatballs in gravy (400 g meat)		10–12			2–3
Stew (750 g meat)		16	+	15	2–3
Poultry					
Chicken in mustard sauce	Approx. 800 g	4	+	12	2–3
Chicken curry	Approx. 900 g	5	+	12	2–3
Chicken risotto	Approx. 1.6 kg	10	+	15	3–5
Fish					
Fillet in sauce	Approx. 900 g	8–10			2–3
Fish curry	Approx. 1.5 kg	5	+	12	3–5
Fresh vegetables					
Carrots	300 g	2	+	6	2
Cauliflower florets	500 g	6	+	10	2
Peas	450 g	5	+	10	2
Peppers, cut into strips	500 g	5	+	10	2
Kohlrabi batons	500 g	3	+	8	2
Brussels sprouts	300 g	3	+	9	2
Asparagus	500 g	5	+	8	2
Broccoli florets	300 g	4	+	4	2
Leeks	500 g	5	+	8	2
Green beans	500 g	4	+	12	2
Frozen vegetables					
Peas, mixed veg.	450 g	5	+	11	2
Spinach	450 g	5	+	7	2
Brussels sprouts	300 g	4	+	6	2
Broccoli	300 g	3	+	6	2
Leeks	450 g	4	+	8	2
Desserts					
Quark souffle (500 g quark)		10–12		–	–
Fruit compote (500 ml fruit juice or 500 g fruit)		6–8		–	–

≋ Microwave power / ⏲ Duration

1) Allow the food to stand at room temperature for a few minutes to enable the heat to spread evenly throughout the food.

Special applications

Your oven has the following Special applications in addition to the Automatic programmes:

- Defrost
- Drying food
- Reheat (Reheating plated meals)
- Heat crockery
- Prove dough
- Low temperature cooking

This Special application is described in "Low temperature cooking".

- Pizza
- Sabbath programme

This section also gives information the following applications:

- Gentle bake
- Frozen food/Ready meals

Defrost

Use the Defrost function to gently defrost frozen food.

Only use heat-resistant containers which are microwave safe.

- Select "Special applications".
- Select "Defrost".
- Select the food category.
- Enter the weight of the food.
- Follow the instructions in the display.

Air is circulated throughout the cabinet to gently defrost the food.

⚠ Danger of salmonella poisoning. It is particularly important to observe food hygiene rules when defrosting poultry. Do not use the liquid from the defrosted poultry. Pour it away, and wash the tray, the sink and your hands.

Tips

- Place the food to be defrosted on the glass tray without its packaging.
- When defrosting poultry, put it on the rack over the glass tray to catch the defrosted liquid so that the meat is not lying in this liquid.
- Meat, poultry and fish do not need to be fully defrosted before cooking. Defrost so that the surface is sufficiently soft to take herbs and seasoning.

Drying food

This programme is designed for traditional style drying of food to preserve it.

The temperature can be set between 80 and 100 °C.

It is important that fruit and vegetables are ripe and not bruised before they are dried.

■ Prepare the food for drying

– Peel and core apples, and cut into slices 0.5 cm thick.

– Stone plums, if necessary.

– Peel, core and cut pears into thick wedges.

– Peel and slice bananas.

– Clean mushrooms and cut them in half or slice them.

– Remove parsley and dill from the stem.

■ Distribute the food to be dried evenly over the glass tray or the rack.

■ Select "Special applications".

■ Select "Drying".

■ Alter the recommended temperature if necessary and then set the duration.

■ Follow the instructions in the display.

Food	Drying time
Fruit	2–8 hours
Vegetables	3–8 hours
Herbs*	50–60 minutes

* Because this programme uses the fan you should use Conventional heat ⊟ with a temperature of 80–100 °C for drying herbs.

■ Reduce the temperature if condensation begins to form in the oven.

⚠ Danger of burning. Wear oven gloves when removing the dried food from the oven.

■ Allow the dried fruit or vegetables to cool down after drying.

Dried fruit must be completely dry, but also soft and elastic.

■ Store in sealed glass jars or tins.

Reheat

This programme is designed to reheat cooked food.

Only use heat-resistant containers which are microwave safe.

- Place the food to be reheated in its dish on the rack. Do not cover it.
- Select "Special applications".
- Select "Reheat".
- Select the food category.
- Enter the weight of the food.
- Follow the instructions in the display.

⚠ Danger of burning.
Wear oven gloves when removing the dishes from the oven.
Droplets of water may have accumulated underneath the dish.

Prove dough

This programme is designed specifically for proving yeast dough.

The temperature can be set between 30 and 50 °C.

- Select "Special applications".
- Select "Prove dough"
- Alter the recommended temperature if necessary and then set the duration.
- Follow the instructions in the display.

Pizza

This programme is designed specifically for baking pizza.

The temperature can be set between 160 and 250 °C.

- Select "Special applications".
- Select "Pizza".
- Alter the recommended temperature if necessary and then set the duration.
- Follow the instructions in the display.

Heat crockery

This programme is designed to pre-heat your crockery.

The temperature can be set between 50 and 80 °C.

Use heat-resistant crockery.

- Place the rack on shelf level 1 and place the dish to be pre-heated on it.
- Select "Special applications".
- Select "Heat crockery".
- Alter the recommended temperature if necessary and then set the duration.
- Follow the instructions in the display.

⚠ Danger of burning
Wear oven gloves when removing dishes from the oven.

- Remove the hot dishes.cake
- Switch the oven off.

Gentle bake

The Gentle bake function is ideal for bakes and gratins which require a crisp top.

The temperature can be set between 100 and 250 °C.

- Select "Oven functions".
- Select "Gentle bake" and change the recommended temperature if necessary.
- Follow the instructions in the display.

The table contains just a few examples.

Food	[°C]		[min]
Lasagne	190	2	45–60
Potato gratin	180	2	55–65
Vegetable bake	180	2	55–65
Pasta bake	190	2	40–50

Temperature / Shelf level / Duration

For other recipes, use the temperature and time settings given for Fan plus as a guide.

Sabbath programme

This programme is for religious observance.

Select the Sabbath programme and then select the oven function and temperature.

The programme will only start after the door is opened and closed:

– The cooking process will begin after approx. 5 minutes using Conventional heat ☰.

– The oven will heat up to the temperature you have set and will maintain this temperature for a maximum of 72 hours.

– The interior lighting does not come on, even when the door is opened.

> If you have selected "Settings – Lighting – On", the lighting will remain switched on throughout the programme.

– "Sabbath programme" will appear in the display throughout the programme.

– The time of day display is switched off.

A Sabbath programme that has been started cannot be changed, nor can it be saved under "User programmes".

The programme can only be cancelled by switching the oven off.

To use the Sabbath programme

■ Select "Special applications".

■ Select "Sabbath programme".

■ Select Conventional heat ☰.

> The Sabbath programme cannot be started if the minute minder is being used.

■ Set the temperature.

■ Select "OK".

The oven is now ready for placing the food in it.

Auto and the set temperature will appear in the display.

■ Open the door when you want to start the programme.

■ Place the food in the oven.

■ Close the door.

The oven heating will switch on after 5 minutes.

If you want to end the programme early:

■ Touch the On/Off sensor ⏻ and wait until the oven switches itself off automatically.

Frozen food / Ready meals

Tips

Cakes, pizza, baguettes

- Bake on a layer of baking parchment placed on the rack.
- Use the lowest temperature recommended on the manufacturer's packaging.

Oven chips, croquettes or similar items

- Place them on baking paper on the rack.
- Use the lowest temperature recommended on the manufacturer's packaging.
- Turn several times during cooking.

Method

Eating food which has been cooked correctly is important for good health.

Only bake cakes, pizza, chips etc. until they are golden. Do not overcook them.

- Select the function and temperature recommended on the manufacturer's packaging.
- Pre-heat the oven.
- Place the food in the pre-heated oven on the shelf level recommended on the packaging.
- Check the food at the end of the shortest duration recommended on the packaging.

Tip: This oven offers Automatic programmes for some Frozen food/ Ready meals (see "Automatic programmes").

Note for test institutes

Test food acc. to EN 60350 (Function: Microwave solo ≋)

Test food	≋ [W]	◷ [min]	Standing time [min] 1)	Notes
Defrost raspberries, 250 g 2)	150	7	3	Do not cover
Defrost minced beef, 500 g 2)	150	16–18	5–10	Do not cover, turn halfway through defrosting
Cook meat loaf, 900 g2)	600 + 450	8:30 + 11	5	Container: Pyrex 03.838.80, 28 cm long, do not cover
Cook potato gratin,1105 g 2)	300 + ▭	35–40	5	Container: Pyrex 03.827.80
Bake sponge cake, 475 g2)	450	7:30–8:30	5	Pyrex 03.827.80, do not cover
Grill chicken, 1200 g frozen weight, 2 halves 3)	150 + ▭	38–43	2	Place the breast side face downwards, turn halfway through cooking
Cook custard, 1000 g2)	450	25–27	120	Pyrex 07.227.8 (25 x 25 cm)

≋ Microwave power / ▭ Grill / ◷ Defrost or cooking duration

1) Leave the food to stand at room temperature.
   This allows the heat to be distributed evenly through the food.

2) Place the glass tray on shelf level 1.

3) Place the glass tray and rack on shelf level 1.

Test food acc. to EN 60350 (functions without microwave power)

Test food	Tin/ glass tray	Function	[°C]	[min]
Drop cookies	1 glass tray 1)		140	38–45
	2 glass trays 2)		140	50–55
	1 glass tray 1)		160	22–27 + pre-heating
Sponge cake	Springform, 3) 26 cm, dark		170	32–37
	Springform, 3) 26 cm, dark		180	18–24 + pre-heating
Apple pie	Springform, 3) 20 cm, dark		160	110–120
	Springform, 3) 20 cm, dark		160	110–120
	Springform, 3) 20 cm, dark		170	65–75
Small cakes	1 glass tray 1)		150	26–34
	2 glass trays 2)		150	30–36
	1 glass tray 1)		170	24–28 + pre-heating
Toast	Rack 4)		Level 3	5–7 + 5 min. pre-heating
Grill beef burgers (12 burgers)	Rack on top of glass tray 1)		Level 3	1st side: 16–18, 2nd side: 12–14 + 5 min. pre-heating

Fan plus / Conventional heat / Intensive bake / Grill

Temperature / Cooking duration

1) Use shelf level 2.

2) Use shelf level 1+3.

3) Use shelf level 1.

4) Use shelf level 3.

⚠ Danger of burning. Make sure the oven heating elements are switched off and that the oven cavity is cool.

⚠ Danger of injury. Do not use a steam cleaning appliance to clean this appliance. The steam could reach electrical components and cause a short circuit.

Clean the oven interior, inside of the door and door seal as soon as the oven has cooled down. Waiting too long can make cleaning unnecessarily difficult and in some cases impossible. In certain circumstances, very heavy soiling can even damage the appliance.

Check the door and door seal for any sign of damage.
If any damage is noticed, the oven should not be used again in microwave mode until the fault has been rectified by a service technician.

Unsuitable cleaning agents

To avoid damaging the surfaces, do not use:

- cleaning agents containing soda, ammonia, acids or chlorides,
- cleaning agents containing descaling agents on the oven front,
- abrasive cleaning agents, e.g. powder cleaners and cream cleaners,
- solvent-based cleaning agents,
- stainless steel cleaning agents,
- dishwasher cleaner,
- glass cleaning agents,
- cleaning agents for ceramic hobs,
- hard, abrasive brushes or sponges, e. g. pot scourers, brushes or sponges which have been previously used with abrasive cleaning agents,
- melamine eraser blocks,
- sharp metal scrapers or tools,
- wire wool or metal scourers,
- stainless steel spiral pads,
- spot cleaning,
- oven cleaner*.

* these can, however, be used to remove very heavy soiling from PerfectClean treated surfaces.

Soiling might become impossible to remove if it is not dealt with.
Continued use of the oven without regular cleaning will make it much harder to keep clean.
Soiling is, therefore, best removed after each use of the oven.

Only the glass tray and the boiling rod are dishwasher proof.

Tips

– Soiling caused by spilt juices and cake mixtures is best removed whilst the oven is still warm. Exercise caution and make sure the oven is not too hot - danger of burning.

– The top heat/grill element can be lowered to make it easier to clean the oven.

– To neutralise odours in the oven, put a container of water with some lemon juice in the oven and heat for a few minutes.

Normal soiling

Do not use too much water on the cloth or sponge and do not let water or any other liquid find its way into any openings.

- It is best to remove normal soiling immediately using a clean sponge and a solution of hot water and washing-up liquid or with a clean, damp microfibre cloth.
- After cleaning make sure all residual cleaning agent is thoroughly removed with clean water. This is particularly important when cleaning PerfectClean surfaces as cleaning agent residues can impair the non-stick properties.
- After cleaning and rinsing, wipe the surfaces dry using a soft cloth.

Food probe

- Clean the food probe with a damp cloth only.

Do not put the food probe into water or clean it in the dishwasher as this will damage it.

Stubborn soiling

Spilt fruit and roasting juices may cause lasting discolouration or matt patches on enamelled surfaces. This discolouration is permanent but will not affect the efficiency of the finish. Do not try to remove this discolouration! Clean these following the instructions given here.

- Moisten stubborn soiling with a solution of hot water and washing-up liquid and leave for a few minutes to take effect.
- You can then also use the scouring pad on the back of a washing-up sponge to remove the soiling.
- After cleaning, rinse thoroughly with clean water, and dry with a soft cloth.
- Very stubborn soiling on PerfectClean treated enamel can be cleaned using Miele oven cleaner. It must be applied to surface when cold. Follow instructions on the packaging.

Non-Miele oven spray must only be used in a cold oven and for no longer than a maximum of 10 minutes.

- You can then also use the scouring pad on the back of a washing-up sponge to remove the soiling.
- After cleaning, remove all oven cleaning agent residues thoroughly with clean water, and dry with a soft cloth.

Lowering the top heat/grill element

If the oven interior roof is badly soiled, the top heat/grill element can be lowered to make cleaning easier.

⚠ Danger of burning.
Make sure the oven heating elements are switched off and cool.

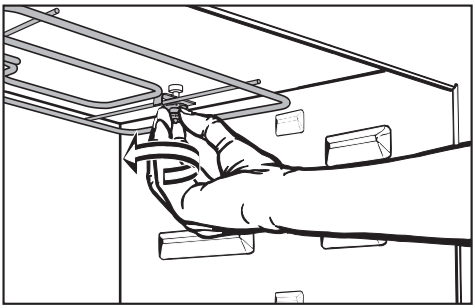

- To lower the top heat/grill element, the nut needs to be unscrewed.

Do not use force to lower it as this can cause it to break.

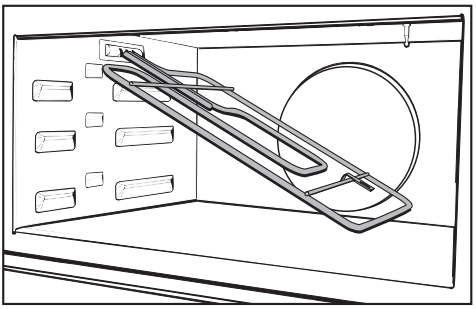

- Carefully lower the top heat/grill element.
- Clean the roof of the oven regularly with a damp cloth or a dishwashing sponge.
- After cleaning, raise the top heat/grill element gently back up again. Refit the nut and tighten to secure the element back in position.

Problem solving guide

With the aid of the following guide, minor problems can be easily corrected without contacting Miele. If having followed the suggestions below, you still cannot resolve the problem, please contact Miele (see back cover for contact details).

⚠ Danger of injury.
Installation, maintenance and repairs may only be carried out by a suitably qualified and competent person. Repairs and other work by unqualified persons could be dangerous.
Miele cannot be held liable for unauthorised work.
Do not attempt to open the casing of the oven yourself.

Problem	Possible cause and remedy
The display is dark.	The time of day is switched off. It will not appear in the display until the oven is switched on. The time can be displayed constantly (see "Settings - Time - Display").
	There is no power to the oven. ■ Check whether the mains fuse has tripped. If it has, contact a qualified electrician or Miele.
A programme will not start.	■ If using a programme with microwave power, make sure that you have entered a power level and a duration. ■ If using a Microwave combination programme, make sure you have entered a power level and a duration for the microwave mode and a temperature for the conventional oven function.

Problem	Possible cause and remedy
When the oven is switched on "System lock 🔒" will appear in the display.	The system lock 🔒 is active. It can be released by pressing the OK sensor for at least 6 seconds. The system lock can be permanently deactivated (see "Settings – System lock 🔒").
The oven does not heat up.	■ Check whether "On" has been selected for demo mode (see "Settings - Showroom programme"). If demo mode has been switched on the oven can be operated but it will not heat up. ■ Deactivate demo mode.
"Power cut - Process cancelled" appears in the display.	There has been a power cut which has caused a current process to stop. ■ Switch the oven off and then back on again. Start the cooking programme again.
12:00 appears in the display.	The power supply was interrupted for longer than 200 hours. ■ Reset the time and date.
The message "Maximum operating duration reached" appears unexpectedly in the display.	The oven has been operating for an unusually long time and this has activated the safety switch-off function. ■ Select "OK". Touch ⮌ to delete "Process finished". The oven will then be ready for use again.
"⚠ Fault XX" appears in the display.	There is a problem that you cannot resolve. ■ Call the Miele Service Department.

Problem	Possible cause and remedy
The food probe is not recognised by the oven. You cannot set a core temperature.	■ Check that the food probe is engaged in the socket properly. If the oven still does not recognise the food probe it must be faulty. A replacement food probe can be ordered from Miele or from your Miele dealer.
If the door is opened whilst using Microwave solo [≋], the oven stops making a noise.	This is not a fault. If microwave power is being used the cooling fan will switch off when the door is opened.
A noise can be heard after a cooking process.	The fan remains switched on after a cooking programme (see "Settings - Cooling fan run-on").
An abnormal sound can be heard when the oven is operating in microwave mode.	■ Check if there are sparks caused by using metal dishes (see "Suitable containers for microwave use").
	■ Check if the food is covered with aluminium foil. If it is, remove the foil.
	■ Check if the rack is inside the oven. Always use the glass tray when using the oven with Microwave power.
The oven has switched itself off.	The oven will switch itself off automatically to save energy if no other action is taken within a certain time frame after switching it on or after the end of a cooking programme. ■ Switch the oven back on.

Problem	Possible cause and remedy
Cakes and biscuits are not cooked properly after following the times given in the chart.	A different temperature from the one given in the recipe was used. ■ Select the temperature required for the recipe.
	The ingredient quantities are different from those given in the recipe. ■ Double check the recipe. The addition of more liquid or more eggs makes a moister mix which would take longer to cook.
Browning is uneven.	The wrong temperature or shelf level was selected. ■ There will always be a slight unevenness. If the unevenness is pronounced, check that the correct temperature and shelf level have been selected.
	The material or colour of the baking tin is not suitable for the oven function. Bright shiny tins are not very suitable. Try using a different tin next time. These reflect heat, which means that the heat does not penetrate to the food effectively, resulting in uneven or poor browning. ■ Dark matt tins are best for baking.

Problem	Possible cause and remedy
The food is not sufficiently heated or is not cooked at the end of a set duration when using Microwave solo ≋.	■ Check that you remembered to restart the programme after interrupting a cooking process using microwave power.
	■ Check that the correct duration was selected for the power level chosen when cooking or reheating with microwave power. The lower the power level the longer the duration.
Food has cooled down too quickly after being reheated or cooked in microwave mode.	Microwaves cause food to heat from the outside first. This heat then moves towards the middle of the food. If food is cooked at a high power level it is possible that the heat may not have reached the centre of the food. Food may be hot on the outside but cool in the middle. When reheating food with different densities, such as plated meals, it is sensible to start with a low power level and select a longer reheating duration.
The oven lighting switches off after a short time.	The oven lighting is set to switch off after 15 seconds (default setting). You can change the default setting for this (see "Settings - Lighting").

Problem	Possible cause and remedy
The oven lighting does not switch on.	The halogen lamp needs replacing. Danger of burning. Make sure the oven heating elements are switched off and cool. ■ Disconnect the appliance from the mains. The lamp cover consists of two parts: a glass piece and a mounting. Hold the lamp cover securely when removing it so that it does not fall. Place a tea towel over the floor of the oven and the open door to protect them. ■ Remove the screw to the lamp cover using a T20 Torx screwdriver, and take off the cover. Do not touch the halogen lamp with bare fingers. Please follow the manufacturer's instructions. ■ Pull the halogen lamp out. ■ Replace it with a new halogen lamp (Osram 66725, 230 V, 25 W, G9). It must be thermally stable up to 300 °C. ■ Replace the glass piece in the mounting, and refit the lamp cover. Make sure that the lug on the mounting is correctly located in the notch in the roof of the oven, then screw the mounting back into place. ■ Reconnect the oven to the electricity supply.

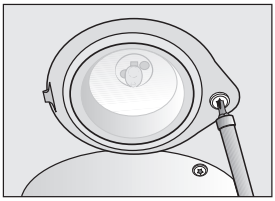

After sales service

In the event of any faults which you cannot remedy yourself, or if the appliance is under guarantee, please contact

– your Miele Dealer

or

– The Miele service department.

See back cover for contact details.

When contacting your Dealer or Miele, please quote the model and serial number of your appliance.

This information is given on the data plate, visible on the front frame of the oven, with the door fully open.

Please note that telephone calls may be monitored and recorded for training purposes.

N.B. A call-out charge will be applied to service visits where the problem could have been resolved as described in these instructions.

Guarantee

For further information on the appliance guarantee specific to your country please contact Miele. See back cover for contact details.

In the U.K. your appliance is guaranteed for 2 years from the date of purchase. However, you must activate your cover by calling 0845 365 6640 or registering online at www.miele.co.uk.

All electrical work should be carried out by a suitably qualified and competent Miele approved service technician in strict accordance with current national and local safety regulations (BS 7671 in the UK).

This appliance is supplied with a mains cable for connection to a 230 - 240 V, 50 Hz single phase supply.

The voltage and connected load are given on the data plate situated at the front of the oven interior. Please ensure that these match the household mains supply.

Connection should be made via a fused connection unit or a suitable isolator, which complies with national and local safety regulations, and the on/off switch should be easily accessible after the appliance has been installed.

If the switch is not accessible after installation (depending on country) an additional means of disconnection must be provided for all poles.

Switches with a minimum all-pole contact gap of 3mm are suitable for isolating the appliance. These include circuit breakers, fuses and protective devices.

For extra safety it is advisable to protect the appliance with a suitable residual current device (RCD). Please contact a qualified electrician for advice.

If the cable is damaged a new cable must be fitted by a Miele approved service technician.

This appliance conforms with European Standard EN 55011 as a Group 2, Class B product. Group 2 appliances use high frequency energy in the form of electro-magnetic waves to create heat in food. Class B is assigned to appliances that are suitable for domestic use.

Important UK

The wires in the mains lead are coloured in accordance with the following code:

Green/yellow = earth

Blue = neutral

Brown or black = live

WARNING
THIS APPLIANCE MUST BE EARTHED

Appliance and niche dimensions

Dimensions are given in mm.

Installation in a tall unit

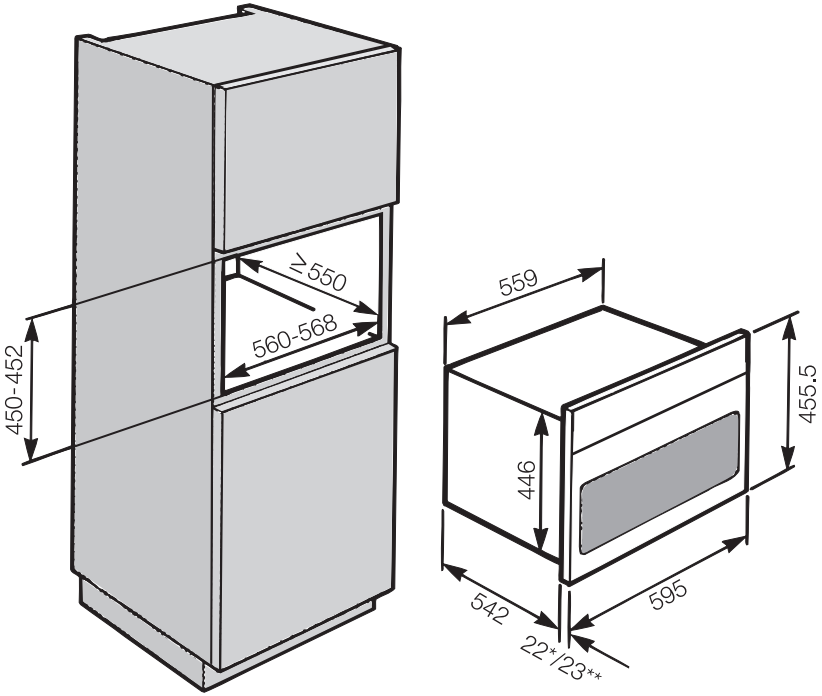

* Ovens with glass front
** Ovens with metal front

Installation in a base unit

If fitted underneath a hob, the installation instructions for the hob must also be taken into account.

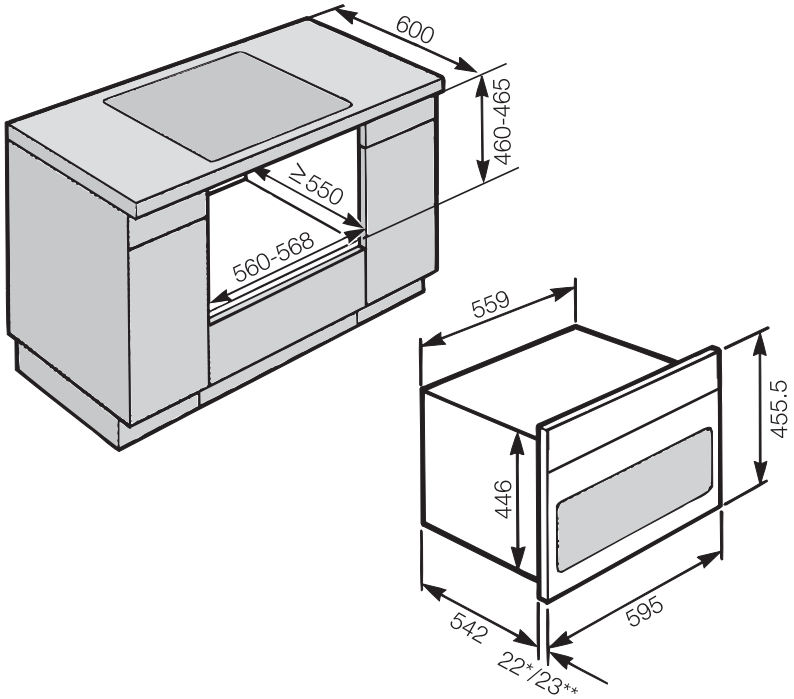

* Ovens with glass front
** Ovens with metal front

Front dimensions

Dimensions are given in mm.

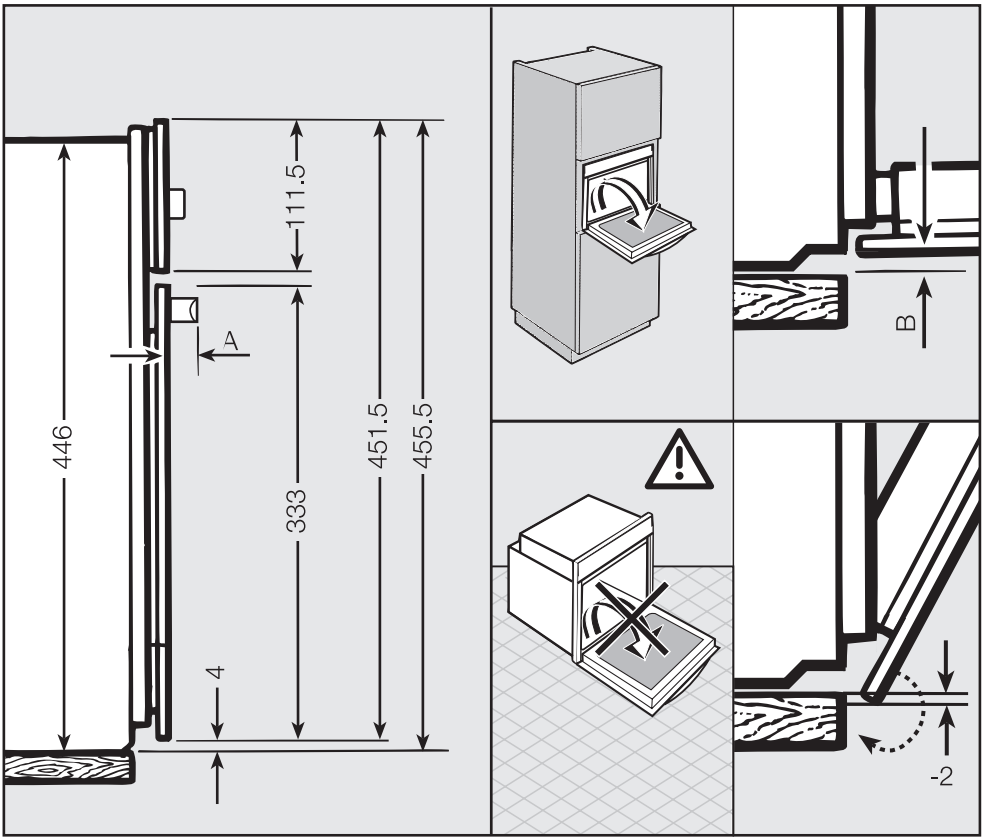

A H6500BM: 45 mm
H6600BM: 42 mm

B Ovens with glass front: 2.2 mm
Ovens with metal front: 1.2 mm

⚠ The oven must not be operated until it has been correctly installed in its housing unit.

- Connect the mains cable from the oven to the isolator.
- Push the oven into the housing unit up to the oven trim and align it.

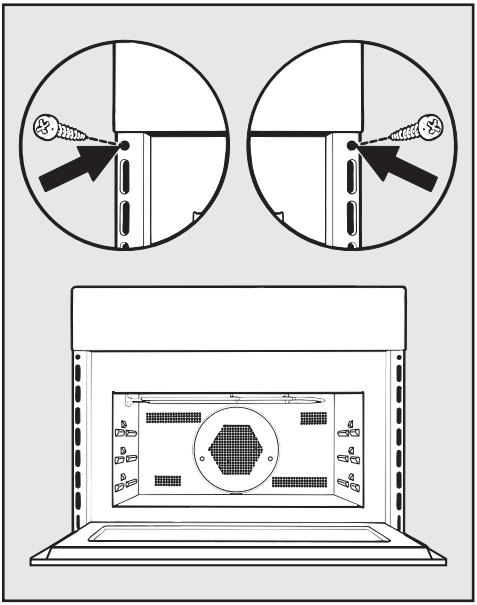

- Open the door and use the screws supplied to secure the oven to the side walls of the housing unit through the holes in the oven trim.

Apple sponge

Serves approx. 12

Mixture:
150 g butter or margarine
150 g sugar
2 tsp vanilla sugar
3 eggs
Juice of 1/2 a lemon
150 g plain flour
1/2 tsp baking powder

Topping:
750 g sharp dessert or cooking apples
Icing sugar or apricot jam

Method

1. Cream together the butter or margarine, sugar, vanilla sugar and eggs.

2. Sift the baking powder and flour together and fold into the creamed mixture together with the lemon juice. Spoon into a greased and floured springform cake tin (∅ 26 cm) or the glass tray if using the combination programme.

3. Peel, quarter and core the apples. Make several cuts into the top of each quarter and gently press into the cake mixture. Bake until golden.

4. Leave to cool to room temperature, then dust with icing sugar or spread a little apricot jam over the top.

As an alternative, the apples can be chopped into small pieces and folded into the cake mixture. This cake is also delicious with 500 g sour cherries, blueberries or apricots.

Settings

Automatic programmes \ Baked goods \ Apple \ Sponge

Duration: Approx. 60 minutes

Fan plus

Temperature: 150–170 °C
Shelf level: 1
Duration: 55–65 minutes

MW + Fan plus

Power level/Temperature: 160 °C + 80 W
Shelf level: 1
Duration: 45–55 minutes

Conventional heat

Temperature: 160–180 °C
Shelf level: 1
Duration: 55–65 minutes

Apple pie

Serves approx. 12

Pastry:
300 g plain flour
1/2 tsp baking powder
200 g butter or margarine
100 g sugar
2 tsp vanilla sugar
1 egg

Topping:
1000 g apples
50 g raisins
50 g sugar
1/2 tsp cinnamon

For glazing:
1 egg yolk
2 tbsp milk

Method

1. Mix the flour, baking powder, butter or margarine, sugar, vanilla sugar and egg together and knead to a smooth dough. Press approx. 2/3 of the pastry into the bottom of a greased and floured springform cake tin (∅ 26 cm) to make the base. Form a rim about 2 cm high around the edges of the tin. Bake blind. (This is not necessary with the Automatic programme).

2. Peel and core the apples, then either dice or slice them. Steam them gently in a saucepan together with the raisins, sugar, cinnamon and 3 tablespoons of water. Leave to cool and then place in the (blind-baked) pastry case.

3. Roll the remaining pastry out on a floured surface and place it over the apples. Press the edges together, then bake. About 10 minutes before the end, brush the surface with a mixture of milk and egg.

When using the Automatic programme, you will need to glaze the pie before it goes in the oven. Do not open the door during baking.

Settings

Automatic programmes \ Baked goods \ Apple \ Pie

Duration: Approx. 75 minutes

Intensive bake

Temperature: 150–170 °C
Shelf level: 1
Duration: 60–70 minutes

Conventional heat

Temperature: 170–190 °C
Shelf level 1
Duration:
Pre-baking: 20–25 minutes + pre-heating
Duration: 30–35 minutes

Apple hazelnut streusel

Serves approx. 12

Base/Streusel topping:
200 g melted butter
350 g plain flour
1 tsp baking powder
150 g sugar
2 tsp vanilla sugar
60 g hazelnut brittle

Topping:
1000 g apples
50 g sugar
Zest of one lemon
Juice of one lemon

Method

1. Mix the flour, baking powder, sugar and vanilla sugar together. Add the slightly cooled butter. Rub together to make a crumbly mixture.

2. Press about 2/3 of the mixture into the base of a ∅ 26 cm springform cake tin. Mix the remaining streusel mixture with the broken up hazelnut brittle.

3. Peel, quarter, core and dice the apples. Mix the apples with the sugar, lemon zest and lemon juice and then arrange on the pastry base. Sprinkle the streusel-brittle mix over the top and bake.

Settings

Automatic programmes \ Baked goods \ Apple \ Streusel

Duration: Approx. 63 minutes

Fan plus

Temperature: 160 °C
Shelf level: 1
Duration: 65–75 minutes

Conventional heat

Temperature: 160–180 °C
Shelf level: 1
Duration: 55–65 minutes

Gateau

Serves approx. 16

Basic mixture:
4 egg whites
4 tbsp hot water
175 g sugar
4 egg yolks
200 g plain flour
2 tsp baking powder

Luxury mixture:
6 egg whites
180 g sugar
2 tsp vanilla sugar
6 egg yolks
90 g plain flour
90 g cornflour

Method:

1. Beat the egg whites (with the hot water if using the basic recipe) until stiff, Slowly add the sugar (and the vanilla sugar if using the luxury recipe), beating after each addition and then fold in the beaten egg yolk.

2. Sift the baking powder or cornflour (depending on recipe) into the flour and fold into the egg white mixture.

3. Lightly butter a springform tin (∅ 26 cm) and line with baking paper. Pour the mixture into the tin, smooth the top and bake until golden.

4. After baking loosen around the edges using a sharp knife. Turn the cake out and remove the baking parchment. Cut the cake horizontally into 2 or 3 rounds. Fill with your choice of pre-prepared filling.

Settings

Automatic programmes \ Baked goods \ Gateau \ 4 eggs or 5–6 eggs

Duration (4 eggs): approx. 29 minutes
Duration (5–6 eggs): approx.
45 minutes

Fan plus

Temperature: 160–180 °C
Shelf level: 1
Duration:
– 30–35 minutes (Basic mixture)
– 40–50 minutes (Luxury mixture)

Conventional heat

Temperature: 170–190 °C
Shelf level: 1
Duration:
– 20–25 minutes (Basic mixture) + pre-heating
– 35–40 minutes (Luxury mixture) + pre-heating

Tip: If making a sponge flan to fill with fruit, halve the quantities given above for the basic recipe and reduce the duration by approx. 5 minutes. To make a chocolate sponge base, add 1-2 teaspoons of cocoa powder to the flour mixture.

I. Quark filling

Ingredients
500 g quark
100 g sugar
Approx. 100 ml milk
2 tsp vanilla sugar
Juice of one lemon
12 leaves of white gelatine
500 ml double cream

For dusting:
Icing sugar

Method
Mix together the quark, sugar, milk, vanilla sugar and lemon juice. Soak the gelatine in cold water for about 10 minutes. Squeeze the gelatine, then dissolve it for 20 seconds using microwave power at 450 W in the microwave oven or in a pan on a low hob setting. Stir a little of the quark mixture into the gelatine and when cool, add this mixture to the remainder of the quark mixture. Stir several times as it thickens. When visible traces are left in the mixture after running a fork through it, fold in the stiffly whipped cream. Place one round of cake on a serving platter and spread some of the quark mixture over it. Top it with another layer of the cake. Add some more of the mixture, then top it with the final piece of the cake. Place in the refrigerator to chill and then dust with icing sugar before serving.

Tip: For a fruity variation, add about 300 g of bottled and drained sour cherries or mandarin orange segments to the quark mixture.

II. Cappuccino filling

Ingredients
100 g dark chocolate
6 leaves of white gelatine
80 ml Espresso
500 ml double cream
4 tsp vanilla sugar
80 ml coffee liqueur
1 tbsp cocoa powder

For dusting:
Cocoa powder

Method
Melt the chocolate. Beat the cream until stiff. Soak the gelatine in cold water for about 10 minutes. Squeeze the gelatine, then dissolve it for 20 seconds using microwave power at 450 W in the microwave oven or in a pan on a low hob setting. Leave to cool slightly. Then stir half the espresso and half the coffee liqueur into the gelatine and add to the remaining whipped cream. Put about 3 tbsp of the cream to one side. Divide the rest of the cream in half and stir the vanilla sugar into one half and the melted chocolate and cocoa powder into the other.

Place one round on a serving platter and drizzle with a little coffee liqueur and espresso. Spread the chocolate cream over this and top with another layer of the cake. Drizzle with the remaining liqueur and espresso. Spread this with the vanilla-flavoured cream, then top it with the final piece of cake. Spread the cream you put to one side over the top of the cake and dust with a little cocoa powder before serving.

Butter cake

Serves approx. 20

Dough:
400 g strong white flour
40 g soft butter
150–200 ml lukewarm milk
30 g fresh yeast
50 g sugar
A pinch of salt
1 egg yolk

Topping:
125 g soft butter
2 tsp vanilla sugar
100 g sugar
150 g flaked almonds

Method

1. Place the flour, butter, crumbled yeast, sugar, salt and egg yolk in a mixing bowl. Add enough milk to blend into a smooth, velvety dough.

2. Leave to prove for about 20 minutes at room temperature. Punch down, then roll out on the greased glass tray and leave to prove for another 20 minutes. When risen, make indentations in the top with your fingers.

3. To make the topping, mix the butter with the vanilla sugar and half of the sugar. Using two teaspoons, drop small balls of the mixture into the indentations. Sprinkle the remaining sugar and flaked almonds over the top.

4. Leave to prove for another 10 minutes before baking until golden.

Settings

Automatic programmes \ Baked goods \ Butter cake \ Glass tray

Duration: Approx. 28 minutes

Fan plus

Temperature: 150–170 °C
Shelf level: 2
Duration: 25–30 minutes

Conventional heat

Temperature: 160–180 °C
Shelf level: 1
Duration: 20–25 minutes + pre-heating

Tip: To make your own vanilla sugar: Cut a vanilla pod in half lengthways and cut each half into 4-5 pieces. Place in a sealed jar with 500 g of caster sugar and leave for 3 days to allow the sugar to absorb the flavour. For a more intensive flavour, scrape the seeds out of the vanilla pod and add this to the sugar.

Guglhupf

Serves approx. 16

60 g butter
50 g sugar
1 egg
Zest of half a lemon
A pinch of salt
500 g strong white flour
1/2 cube of fresh yeast (21 g)
375 ml milk
50 g raisins

For dusting:
Icing sugar

Method:

1. Beat the butter until creamy. Add the sugar and egg yolk and mix well. Add the lemon zest, salt, flour, yeast and milk, and mix all the ingredients to a smooth dough.

2. Fold the stiffly beaten egg white into the mixture, together with the raisins. Grease and flour a ring tin (∅ 24 cm) and pour the mixture into it. Place in the oven and start the Automatic programme.

If you are not using the Automatic programme, leave to prove for a further 30 minutes at room temperature or in the oven at 50 °C for approx. 15 minutes until the dough has doubled in size. Bake until golden.

3. When cool, dust with the icing sugar.

Setting:

Automatic programmes \ Baked goods \ Guglhupf

Duration: Approx. 60 minutes

Fan plus

Temperature: 150–170 °C
Shelf level: 2
Duration: 50–60 minutes

Conventional heat

Temperature: 160–180 °C
Shelf level: 2
Duration: 50–60 minutes

Plaited loaf

Serves approx. 16

750 g strong white flour
1 1/2 cubes of fresh yeast (approx. 60 g)
200–250 ml lukewarm milk
100 g sugar
125 g soft margarine or butter
A pinch of salt
2 eggs
75 g raisins
Zest of one lemon

For glazing and the topping:
1 egg yolk
30 g crystal sugar
50 g flaked almonds

Method

1. Place the flour, crumbled yeast, sugar, butter or margarine and eggs in a mixing bowl. Add the milk and knead to a smooth, elastic dough. Then mix in the raisins and lemon zest.

2. Leave to prove at room temperature for approx. 30 minutes or in the oven at 50 °C for approx. 20 minutes until the dough has doubled in size.

3. Divide into 3 pieces and roll each one out to about 40 cm in length. Plait the three pieces together and place on the greased glass tray.

4. Brush with egg yolk and sprinkle with the crystal sugar and almonds. Leave to prove for another 30 minutes, then bake until golden.

Settings

Automatic programmes \ Baked goods \ Plaited loaf

Duration: Approx. 50 minutes

Fan plus

Temperature: 150–170 °C
Shelf level: 2
Duration: 35–45 minutes

Conventional heat

Temperature: 160–180 °C
Shelf level: 1
Duration: 30–40 minutes

Tip: 1 1/2 packets of dried yeast can be used instead of fresh yeast.

This dough can also be made into a crown instead of a loaf. Place 4–6 hard boiled painted eggs in the centre for a colourful Easter celebration.

Marble cake

Serves approx. 18

250 g butter or margarine
200 g sugar
2 tsp vanilla sugar
4 eggs
4 tbsp rum
500 g plain flour
5 tsp baking powder
3 tbsp cocoa powder
3 tbsp milk

Method

1. Cream together the butter or margarine, sugar, vanilla sugar and eggs. Stir in the rum and then fold in the flour and baking powder.

2. Stir the cocoa power and milk into about 1/3 of the mixture.

3. Spoon half the remaining plain mixture into a greased ring tin (∅ 26 cm). Spread the cocoa mixture over the top, and finally the rest of the plain mixture.

4. Swirl a fork through the mixture to give a marbled effect, and bake.

Settings

Automatic programmes \ Baked goods \ Marble cake

Duration: Approx. 65 minutes

Fan plus

Temperature: 150–170 °C
Shelf level: 1
Duration: 60–70 minutes

Conventional heat

Temperature: 160–180 °C
Shelf level: 1
Duration: 60–70 minutes

Sponge cake

Serves approx. 12

200 g butter
200 g sugar
4 eggs
Juice and zest of one lemon
125 g cornflour
125 g self-raising flour
1 tsp baking powder

Method

1. Cream together the butter and sugar. Add the eggs, lemon juice and lemon zest.

2. Sift together the flour with the cornflour and baking powder and fold in to the mixture.

3. Transfer the mixture into a loaf tin lined with baking parchment and make a slight dip down the centre with a knife. Bake until golden.

4. When ready, turn the cake out onto a wire rack, and peel off the paper. Dust with icing sugar or cover with lemon icing.

Settings

Automatic programmes \ Baked goods \ Sponge cake

Duration: Approx. 85 minutes

Fan plus

Temperature: 140–160 °C
Shelf level: 1
Duration: 65–80 minutes

Conventional heat

Temperature: 150–170 °C
Shelf level: 1
Duration: 60–80 minutes

Tip: Orange juice may be used instead of lemon juice. For a special occasion, pierce the top of the cake several times with a fork and drizzle Gran Marnier or Cointreau over, and use chocolate icing instead of lemon icing.

Streusel cake

Serves approx. 16

Pastry base:
400 g plain flour
2 tsp baking powder
125 g sugar
2 tsp vanilla sugar
200 g butter or margarine
1 egg
1 tsp rum essence

Filling:
200 g apricot conserve

Streusel:
350 g plain flour
175 g sugar
2 tsp vanilla sugar
1/2 tsp cinnamon
200 g melted butter

Method

1. For the pastry, rub the dry ingredients into the butter or margarine, add the egg and rum/rum essence and knead lightly to make pastry.

2. Roll out the pastry into the greased glass tray and prick several times with a fork.

3. Spread the apricot conserve over the pastry.

4. For the streusel topping, mix together the flour, sugar, vanilla sugar and cinnamon. Add the slightly cooled butter. Rub together to make a crumbly mixture. Scatter the crumble over the pastry base and bake until golden.

Settings

Automatic programmes \ Baked goods \ Streusel cake \ Plain

Duration: Approx. 38 minutes

Fan plus

Temperature: 150–170 °C
Shelf level: 2
Duration: 40–50 minutes

Conventional heat

Temperature: 160–180 °C
Shelf level: 1
Duration: 35–45 minutes

Fruit streusel cake

Serves approx. 20

Base:
375 g strong white flour
1 cube of fresh yeast (42 g)
Approx. 125 ml lukewarm milk
40 g sugar
75 g butter or margarine, melted
1 egg

Topping:
Approx. 1500 g sharp apples, plums or cherries

Topping:
200 g plain flour
125 g sugar
2 tsp vanilla sugar
125 g butter or margarine
1/2 tsp cinnamon

Method

1. Sift the flour into a large bowl and make a well in the centre. Crumble the yeast into the well together with a little sugar and some of the milk, and combine these ingredients with some of the flour. Place in the oven at 50 °C for 20 minutes to prove.

2. Add the rest of the ingredients for the base to this mix, and knead to a smooth dough. Return to the oven to prove for a further 30 minutes at 50 °C. Punch down, then roll out into the greased glass tray.

3. Arrange the prepared fruit (apples peeled and cut into 1/2 cm slices; cherries stoned; plums stoned and halved) evenly over the base.

4. Rub the topping ingredients together until you get a crumbly texture, and scatter over the fruit. Place in the oven at 50 °C for 30 minutes to prove, and then bake until golden.

Settings

Automatic programmes \ Baked goods \ Streusel cake \ With filling

Duration: Approx. 50 minutes

Fan plus

Temperature: 150–170 °C
Shelf level: 2
Duration: 40–50 minutes

MW + Fan plus

Power level/temperature: 150 W + 170 °C
Shelf level: 2
Duration: 35–45 minutes

Conventional heat

Temperature: 170–190 °C
Shelf level: 2
Duration: 40–50 minutes

Walnut muffins

Serves approx. 9

100 g raisins
5 tbsp rum
150 g butter
150 g sugar
2 tsp vanilla sugar
3 eggs
150 g plain flour
1 tsp baking powder
125 g walnuts, roughly chopped
9 muffin cases (7-8 cm ∅)

Method

1. Drizzle the rum over the raisins and leave to soak for approx. 30 minutes.

2. Beat the butter until creamy, then gradually mix in the sugar, the vanilla sugar and the eggs. Sift the flour with the baking powder and fold into the mixture together with the walnuts. Finally add the rum-soaked raisins.

3. Place the muffin cases in a muffin tin. Using two spoons, divide the mixture between the cases and bake until golden.

Settings

Automatic programmes \ Baked goods \ Cookies/Muffins \ Muffins \ Without fruit

Duration: Approx. 36 minutes

Fan plus

Temperature: 150–170 °C
Shelf level: 2
Duration: 25–35 minutes

Conventional heat

Temperature: 160–180 °C
Shelf level: 2
Duration: 25–30 minutes + Pre-heating

Chocolate cherry muffins

Serves approx. 12

Muffin mixture:
100 g mocha or dark chocolate
100 g butter
3 eggs
80 g icing sugar
10 g instant cappuccino powder
100 g plain flour
1 tsp baking powder

Filling:
200 g cream cheese
70 g icing sugar
1 egg
10 g plain flour
200 g jar of cherries, drained
12 muffin cases (7 cm ∅)

Method

1. Melt the chocolate (microwave setting 450 W, 3 minutes).

2. Beat the butter until creamy, stir in the eggs and sugar alternately, a little at a time. Fold in the cooled, melted chocolate, the cappuccino powder, the flour and the baking powder.

3. Blend together the mascarpone, icing sugar, egg and flour for the filling. Drain the cherries.

4. Spoon half the chocolate mixture into the bottom of the muffin cases, followed by half of the cherries and all of the mascarpone mixture. Then add the rest of the chocolate mixture and the cherries. Bake, then decorate with plain or milk chocolate cake covering if you wish.

Settings

Automatic programmes \ Baked goods \ Cookies/Muffins \ Muffins \ With fruit

Duration: Approx. 40 minutes

Fan plus

Temperature: 150–170 °C
Shelf level: 2
Duration: 30–40 minutes

Conventional heat

Temperature: 160–180 °C
Shelf level: 2
Duration: 30–40 minutes + pre-heating

Tip: The mixture can be baked in a large cake tin instead of muffin cases. Double the quantity of fruit and increase the baking duration to approx. 50 minutes. Apricots can be used instead of cherries.

Vanilla biscuits

Makes approx. 90

Biscuit mixture:
280 g plain flour
210 g butter
70 g sugar
100 g ground almonds

For dredging:
Approx. 70 g vanilla sugar

Method

1. Mix the flour, butter, almonds and sugar, and knead to a smooth dough. Leave to cool for 30 minutes.

2. Break off pieces of dough, roll them out and then make crescent shapes from them.

3. Arrange on the greased glass tray and bake until golden.

4. Dredge with vanilla sugar whilst still warm.

Settings

Automatic programmes \ Baked goods \ Cookies/Muffins \ Vanilla biscuits

Duration: Approx. 25 minutes

Fan plus

Temperature: 140–160 °C
Shelf level: 2
Duration: 20–30 minutes

Conventional heat

Temperature: 160–180 °C
Shelf level: 2
Duration: 15–20 minutes + pre-heating

Bacon or herb baguettes

Serves approx. 20

250 g strong white flour
250 g strong wholemeal flour
1 x 7g sachet fast action dried yeast
1 tsp sugar
2 tsp salt
1/2 tsp pepper
3 tbsp oil
250 ml lukewarm water
150 g finely diced grilled bacon

or

1 tbsp each of chopped parsley, dill and chives

For glazing:
2–3 tbsp milk
1 egg yolk

Method

1. Mix the flours, yeast, sugar, salt, pepper, oil and water to a smooth dough. Knead in the bacon or herbs.

2. Place the dough in the oven at 50 °C and leave to prove for approx. 40 minutes, then knead again briefly.

3. Punch down, then divide the dough in half, and roll into two 30 cm long loaves.

4. Beat together the milk and egg yolk and brush over the two loaves. Leave to prove for a further 20 minutes in the oven at 50 °C then bake until golden.

Settings

Automatic programmes \ Bread \ Baguettes \ Home made

Duration: Approx. 48 minutes

Fan plus

Temperature: 160–180 °C
Shelf level: 1
Duration: 20–25 minutes + pre-heating

Conventional heat

Temperature: 170–190 °C
Shelf level: 1
Duration: 20–25 minutes + pre-heating

Tip: 12 rolls can be made instead of the baguettes. Cut a cross in the top of each, and brush with beaten egg yolk. Bake until golden.

Flat bread

Serves approx. 12

375 g strong white flour
1 cube of fresh yeast (42 g)
1/2 tsp salt
200–220 ml lukewarm water or buttermilk or 280 g natural yoghurt
3 tbsp oil

For drizzling:
2–3 tbsp oil

Method

1. Dissolve the yeast in the water, buttermilk or yoghurt. Then mix with the flour, salt and oil and knead to a smooth dough.

2. Set the dough aside for approx. 20 minutes. Then punch down and roll out into a circle (approx. ∅ 30 cm). Place the bread on the greased glass tray or a pizza dish.

3. Drizzle with oil and bake until golden.

Settings

Automatic programmes \ Bread \ Flat bread \ Home made

Duration: Approx. 48 minutes

Fan plus

Temperature: 170–190 °C
Shelf level: 1
Duration: 30–35 minutes

Conventional heat

Temperature: 180–200 °C
Shelf level: 1
Duration: 25–30 minutes + pre-heating

Tip: For variety, add 50 g roast onions, or 2 tsp of rosemary or a mixture of 40 g chopped black olives and 1 tbsp chopped pine nuts or 1 tsp chopped herbes de Provence. The flat bread is also ideal for filling. Cut it across the middle and spread both halves with cream cheese. Arrange mixed lettuce, sliced tomatoes, finely sliced onion rings and cucumber on the lower half and replace the top. Serve with tzatziki (500 g finely grated cucumber, 250 g natural yoghurt, 250 g sour cream, 1 crushed garlic clove, 2 tbsp olive oil, salt and pepper).

White bread in tin

Serves approx. 12

1000 g strong white flour
1 cube of fresh yeast (42 g)
2 tsp salt
4 tsp sugar
40 g butter or margarine, melted
600–700 ml lukewarm milk

For glazing:
3 tbsp milk

Method

1. Stir the yeast into a little lukewarm milk until it has dissolved. Mix with the flour, salt, sugar, melted butter/margarine and the rest of the milk to a smooth dough.

2. Transfer the dough into a large loaf tin (15 cm wide) or two smaller tins (11 cm wide). Make a 1/2 cm cut down the centre of the loaf and brush with milk.

3. Prove in the oven for approx. 30 minutes at 50 °C until the loaf has doubled in size, then bake until golden.

Settings

Automatic programmes \ Bread \ White bread in tin

Duration: Approx. 60 minutes

Fan plus

Temperature: 160–180 °C
Shelf level: 1
Duration: 40–50 minutes

Conventional heat

Temperature: 160–180 °C
Shelf level: 1
Duration: 35–45 minutes

Raisin bread

Serves approx. 20

500 g strong white flour
1 cube of fresh yeast (42 g)
100 g sugar
20 g butter or margarine, melted
A pinch of salt
125–200 ml lukewarm buttermilk
125 g quark

Filling:
250 g raisins

Method

1. Stir the yeast into a little buttermilk until it has dissolved. Mix with the flour, salt, sugar, melted butter/margarine and quark to a smooth dough.

2. Wash the raisins and drain well. Carefully knead into the dough.

3. Transfer the dough into a greased loaf tin (11 cm wide).

4. Prove in the oven for approx. 30 minutes at 50 °C until the loaf has doubled in size. Brush the surface with water, then bake until golden.

Settings

Automatic programmes \ Bread \ Sweet bread

Duration: Approx. 75 minutes

Fan plus

Temperature: 160–180 °C
Shelf level: 1
Duration: 40–50 minutes

Conventional heat

Temperature: 170–190 °C
Shelf level: 1
Duration: 40–50 minutes

Pizza variations

Ingredients for 2 portions

Pizza base
Sufficient for 1 x 30 cm ∅ pizza:
125 g strong white flour
10 g fresh yeast
1/4 tsp salt
1 tbsp oil
70–80 ml lukewarm warm

- **Margherita pizza:**
  250 g sliced tomatoes
  150 g Mozzarella cheese, sliced
  Olive oil
  Oregano
- **Onion pizza:**
  300 g finely sliced onions
  Salt, fresh rosemary
  4 tbsp olive oil
- **Vegetarian pizza:**
  150 g pre-cooked broccoli florets
  150 g sliced white mushrooms
  50 g leeks, sliced in rings and cooked
  150 g Mozzarella cheese, diced or sliced
- **Rainbow pizza:**
  One half each of a red, yellow and green pepper, washed and cut into strips
  2 sliced tomatoes
  100 g Emmental cheese, coarsely grated
- **Salmon pizza:**
  200 g salmon, chopped
  2–3 slices of smoked salmon, cut into strips
  3 hard boiled eggs, quartered
  1/2 tsp oregano
  100 g grated Cheddar cheese
- **Leek and Gorgonzola pizza:**
  400 g leeks, sliced into rings
  2 tbsp walnut oil for gently frying the leeks
  Salt and pepper
  100 ml white wine, added to the fried leeks
  150 g Gorgonzola cheese, diced
- **Ricotta and basil pizza:**
  30 g ricotta cheese or quark mixed with
  50 ml double cream
  2 eggs
  1 tbsp walnut oil
  Salt and pepper
  1 tbsp chopped basil, stirred into the cream/egg mixture which is then spread over the pizza base
  2 tomatoes, diced and scattered over the cream/egg mixture
  100 g Gorgonzola cheese, diced and scattered over the cream/egg mixture

Method

1. Pizza dough: Mix the flour, yeast, salt, oil and water together and knead until you have a smooth dough. Leave to prove at room temperature for approx. 20 minutes.

2. Punch down briefly, then roll out on a floured surface to make a circular shape approx. 30 cm in diameter. Transfer to a greased glass tray.

3. Spread some tomato passata over the pizza, and season with salt, pepper and oregano.

4. Arrange the topping of your choice on the pizza and bake immediately.

5. To make a calzone, roll the pizza base out on a floured surface to make a 30 cm diameter circle. Spread the filling of your choice over one half of the base. Fold the other half of the circle over to create a semi-circle. Press the edges together firmly. Place the calzone on the greased glass tray, brush the surface with milk and bake until golden.

Settings

Automatic programmes \ Pizza \ Fresh \ Glass tray or Round baking tray \ Normal topping or Deep topping

Duration:

Topping	Glass tray	Round baking tray
Normal	approx. 52 min	approx. 42 min
Deep	approx. 62 min	approx. 55 min

Fan plus

Temperature: 170–190 °C
Shelf level: 2
Duration: 30–35 minutes + pre-heating

Conventional heat

Temperature: 170–190 °C
Shelf level: 1
Duration: 25–30 minutes + pre-heating

Intensive bake

Temperature: 170–190 °C
Shelf level: 1
Duration: 25–30 minutes

Tip: Double the quantities if you want to make enough dough to cover the entire glass tray and then bake using Fan plus, Conventional heat or Intensive bake for 30–40 minutes.

Vegetable lasagne

Serves approx. 6

2–3 red peppers
2–3 yellow peppers
1 courgette
250 g ricotta cheese (or quark or cream cheese)
100 g crème fraîche
35 g margarine
35 g plain flour
500 ml milk
3 tbsp chopped basil
50 ml oil
25 g pine nuts
Salt, pepper, nutmeg
12 sheets of lasagne

Method

1. Quarter the peppers and remove the seeds and pith. Place the peppers skin side up on the glass tray under the pre-heated grill (Grill level 3, Shelf level 3) for 6–8 minutes until the skin blisters and turns dark brown. Remove the glass tray from the oven, and cover with a damp tea towel. Leave to sweat for about 10 minutes and then peel the skins off the peppers.

2. Slice the courgettes.

3. Whizz the basil, oil, pine nuts and salt into a paste in a blender or food processor. Stir into the ricotta and crème fraîche.

4. Heat the margarine over the hob and gradually add the flour and the milk, stirring all the time to make the sauce. Bring to the boil and season with salt, pepper and nutmeg.

5. Spoon some of the sauce into the bottom of a oven-proof dish. In layers, add lasagne sheets, some of the basil ricotta mixture, then half of the vegetables and finally half of the sauce. Repeat this. Finish with a layer of lasagne and top with the ricotta mixture. Bake uncovered in the oven.

Settings

Automatic programmes \ Bakes & Gratins \ Lasagne \ Depth ...

Duration: Approx. 38 minutes

MW + Fan plus

Power level/temperature: 300 W + 180 °C
Shelf level: 1
Duration: 35–45 minutes

Gentle bake

Temperature: 180–200 °C
Shelf level: 1
Duration: 45–55 minutes

Conventional heat

Temperature: 180–200 °C
Shelf level: 1
Duration: 50–60 minutes

Potato cheese bake

Serves approx. 4

500 g peeled, floury potatoes
250 ml double cream
125 g crème fraîche
150 g grated Cheddar cheese
1 clove of garlic
Salt, black pepper, nutmeg

Method

1. Slice the potatoes thinly and mix with 2/3 of the cheese.

2. Place in a greased oven-proof dish (approx. ∅ 24 cm) which has been rubbed with a garlic clove.

3. Blend together the cream, crème fraîche, salt, pepper and nutmeg and pour evenly over the potatoes. Scatter the rest of the cheese over the top and bake uncovered in the oven until golden.

Settings

Automatic programmes \ Bakes & Gratins \ Potato gratin \ Depth ...

Duration: Approx. 44 minutes

MW + Fan plus

Power level/temperature: 300 W + 180 °C
Shelf level: 1
Duration: 30–35 minutes

Gentle bake

Temperature: 170–190 °C
Shelf level: 1
Duration: 45–55 minutes

Conventional heat

Temperature: 180–200 °C
Shelf level: 1
Duration: 45–55 minutes

Tip: For a low-calorie variation, arrange 750 g sliced potatoes in an oven-proof dish. Season with salt and pepper, and pour over 250 ml of vegetable stock. Bake as above. About 10 minutes before the end of baking, scatter 3 tbsp grated Parmesan over the top.

Pasta bake

Serves approx. 6

300 g macaroni
30 g butter
3 onions, finely diced
2 red peppers
200 g carrots, sliced
600 g beef tomatoes, coarsely diced
200 ml vegetable stock (instant)
300 g crème fraîche
150 ml milk
Garlic salt and pepper
200 g ham, diced
200 g goat's cheese with herbs, diced
150 g grated Cheddar cheese

Method

1. Cook the macaroni in boiling salted water on the hob until al dente. Drain well.

2. Quarter the peppers and remove the seeds and pith. Cut into cubes.

3. Fry the onions gently in the butter. Add the peppers and carrots, and fry briefly with the onions, then pour over the stock. Mix together the crème fraîche, milk, pepper and garlic salt. Stir into the vegetables, and bring to the boil briefly.

4. Transfer the macaroni, tomatoes, ham and goat's cheese into an oven-proof dish, mix in the vegetable sauce, sprinkle with Cheddar and bake until golden.

Settings

Automatic programme \ Bakes & Gratins \ Pasta bake \ Depth ...

Duration: Approx. 35 minutes

MW + Fan plus

Power level/temperature: 300 W + 180 °C
Shelf level: 1
Duration: 35–45 minutes

Gentle bake

Temperature: 170–190 °C
Shelf level: 1
Duration: 40–50 minutes

Conventional heat

Temperature: 180–200 °C
Shelf level: 1
Duration: 40–50 minutes

Minestrone

Serves approx. 4

50 g bacon, diced
1 onion, diced
100 g green beans (frozen)
100 g peas (frozen)
100 g celery
100 g sliced carrots
150 g diced potatoes or 50 g fine noodles
1000 ml beef or vegetable stock
2 tbsp mixed Italian herbs (oregano, thyme, parsley)
1–2 tomatoes
100 g grated Parmesan cheese
Salt to taste

Method

1. Place the bacon, onions, beans, peas, celery, carrots, potatoes or noodles and the herbs in a dish together with the stock, cover and cook for approx. 10 minutes at 850 W. Reduce the power level to 450 W and continue cooking for another 15 minutes. Stir occasionally.

2. Skin or finely peel the tomatoes, dice them and add to the soup.

3. Sprinkle the soup generously with Parmesan, or serve the cheese separately.

Settings

Automatic programmes \ Cook soup with MW \ 1800 g

Duration: Approx. 32 minutes

Microwave

Power level: 850 W + 450 W
Shelf level: 1 (use the glass tray)
Duration: 10 minutes + 15 minutes

Borscht

Serves approx. 4

1 onion, diced
20 g butter
200 g finely diced beef
250 ml beef stock (instant)
200 g potatoes, diced
250 g white cabbage, shredded
200 g beetroot, grated
75 g leeks, finely sliced
1-2 tbsp red wine vinegar, salt to taste
150 g crème fraîche
1 tbsp chopped parsley

Method

1. Place the onions, butter, beef and stock in a dish. Cover, and cook for 5 minutes at 850 W.

2. Add the potatoes, cabbage, beetroot, leeks, vinegar and salt. Cook for 5 minutes at 850 W and then for a further 20 minutes at 450 W.

3. Swirl in the crème fraîche, scatter with parsley and serve.

Settings

Automatic programmes \ Casseroles \ Cook casserole with MW \ 1200 g

Duration: Approx. 23 minutes

Microwave

Power level: 850 W + 850 W + 450 W
Shelf level: 1 (use the glass tray)
Duration: 5 minutes + 5 minutes + 20 minutes

Fish curry

Serves approx. 4

400 g pineapple chunks (tinned)
1 red pepper
1 banana, sliced
600 g firm white fish
3 tbsp lemon juice
40 g butter
125 ml white wine
125 ml pineapple juice
Salt and pepper, Chilli powder
2 tbsp curry powder
2 tbsp cornflour

Method

1. Quarter the peppers, remove the seeds and pith, and cut into narrow strips.

2. Cut the fish into chunks, and place in a dish. Drizzle with lemon juice. Add the pineapple chunks, red pepper, banana, butter, wine, juice, spices and cornflour to the fish, and stir well.

3. Cover and cook for 5 minutes at 850 W and then for a further 12 minutes at 450 W.

Settings

Automatic programmes \ Fish \ Cook fish with MW \ 1600 g

Duration: Approx. 25 minutes

Microwave

Power level: 850 W + 450 W
Shelf level: 1
Duration: 5 minutes + 12 minutes

Fish casserole

Serves approx. 4

750 g filleted white fish, e.g. cod
3 sliced tomatoes
50 g ham, diced
1–2 apples, diced
1 pickled gherkin, diced
1 tsp capers
20 g butter
100 g grated Cheddar cheese
1 tbsp chopped parsley

Method

1. Arrange the sliced tomatoes in the base of an oven-proof dish (Ø 30 cm). Place the fish fillets on top.

2. Mix together the ham, apples, gherkin and capers, and spread over the fish. Mix the parsley with the cheese, and sprinkle over the top.

3. Dot with butter, and bake until golden.

Settings

Automatic programmes \ Fish \ Fish fillet

Duration: Approx. 35 minutes

MW + Fan plus

Power level/temperature: 300 W + 180 °C
Shelf level: 1
Duration: 30–35 minutes

Fan plus

Temperature: 170–190 °C
Shelf level: 1 (use the glass tray)
Duration: 40–45 minutes

Pikeperch in a herb and cream sauce

Serves approx. 6

1 pikeperch (approx. 1500 g)
Juice of one lemon
5 onions, sliced
50 g butter or margarine
Salt and freshly ground black pepper
60 g soft butter
1 carrot, diced
30 g anchovy paste
1 tbsp lemon juice
2 tbsp breadcrumbs
250 g sour cream
2 egg yolks
5 tbsp fresh parsley, chopped
2 tbsp fresh dill, chopped
Extra strong aluminium foil

Method

1. Sprinkle a little salt on the outside and inside of the skinned and cleaned fish. Fry the onions in the butter until golden, then season with salt and pepper.

2. Transfer the onions along with the melted butter, the carrots and 2 tbsp parsley onto a large sheet of aluminium foil, and place the fish on top.

3. Beat together the butter and anchovy paste. Spread the paste over the top side of the fish, drizzle with lemon juice and sprinkle with breadcrumbs. Wrap the fish loosely in the foil, folding the edges to seal.

4. Place the parcel on the glass tray, and cook. Stir the cream, egg yolk, salt, the rest of the parsley and the dill together.

5. Open the parcel after approx. 30 minutes, pour over the cream sauce and continue cooking uncovered.

6. Serve with boiled potatoes and a fresh green salad with a yoghurt lemon dressing.

Settings

Automatic programmes \ Fish \ Whole fish

Duration: Approx. 35 minutes

Fan plus

Temperature: 160–180 °C
Shelf level: 1
Duration: 40–50 minutes

Auto roast

Temperature: 160–180 °C
Shelf level: 1
Duration: 40–50 minutes

Core temperature when using the food probe: 70–75 °C

Paella

Serves approx. 8

6 tbsp olive oil
300 g chicken breast
2 cloves of garlic, finely diced
2 onions, finely diced
300 g long grain rice
200 g peas
1 red pepper
2 very ripe tomatoes or
4 tbsp tomato purée
1000 ml stock
Salt and pepper
1 tsp paprika
1/2 tsp ground saffron
300 g octopus rings
200 g mussels (shelled)
300 g prawns

Method

1. Place the oil in the glass tray. Heat for approx. 10 minutes at 160 °C on Fan plus or at 180 °C on Conventional heat. Add the diced chicken breasts, onions and garlic, and cook for approx. 20 minutes, turning halfway through cooking.

2. Stir in the rice, peas, pepper strips, sliced tomatoes or tomato purée and half of the stock. Season with salt, pepper and saffron, and cook uncovered for 30 minutes, stirring occasionally.

3. Add the rest of the stock, the octopus rings, mussels and prawns. Stir thoroughly, and cook uncovered for a further 20 minutes. If wholegrain rice is being used, the cooking time will need to be extended by 20-30 minutes.

Settings

Automatic programmes \ Fish \ Paella \ Fresh

Duration: Approx. 90 minutes

Fan plus

Temperature: 150–170 °C
Shelf level: 1
Duration: 70–80 minutes

Conventional heat

Temperature: 170–190 °C
Shelf level: 1
Duration: 70–80 minutes

Fillet of pork in a Roquefort sauce

Serves approx. 2

500 g pork fillet
Salt and pepper
3 tbsp oil
2 onions, finely diced
50 ml white wine
125 ml double cream
200 g Roquefort cheese
Roux made from 1 tbsp margarine and 1 tbsp flour
2 tbsp chopped parsley

Method

1. Place the onions in a dish with the oil, cover and cook for 5 minutes at 850 W. Toss the pork in the onions. Add the wine, cover and cook for 10 minutes at 450 W.

2. Crush the cheese a little, and mix with the cream and roux until smooth. Add to the meat, and mix with the wine. Cook uncovered for 5 minutes at 450 W, stirring occasionally.

3. Slice the meat, pour over the sauce and sprinkle with chopped parsley.

Settings

Automatic programmes \ Meat \ Cook meat with MW \ 1000 g

Duration: Approx. 22 minutes

Microwave

Power level: 850 W + 450 W + 450 W
Shelf level: 1
Duration: 5 minutes + 10 minutes + 5 minutes

Roast pork

Serves approx. 6

1 kg joint of pork
Salt, pepper and paprika
1 tsp mustard
30 g butter or margarine
100 ml double cream or crème fraîche
Cornflour

Method

1. Season the meat with salt, pepper and paprika, and spread over the mustard. Dot with butter, place in a roasting dish, cover and cook for about 30 minutes.

2. Add the cream/crème fraîche or a little water and continue to roast uncovered until done.

3. When ready, transfer the meat to a serving dish. Add water to the juices in the pan and thicken with cornflour. Carve the meat, and serve with the gravy.

Settings

Automatic programmes \ Meat \ Pork \ Ham roast \ 1000 g

Duration: Approx. 100 minutes

Auto roast

Temperature: 160–180 °C
Shelf level: 1
Duration: 100–130 minutes

Conventional heat

Temperature: 180–200 °C
Shelf level: 1
Duration: 100–130 minutes

Core temperature when using the food: 80–85 °C

Pork en croûte

Serves approx. 4

2 pork tenderloin (300 g each)
Salt, pepper and paprika
50 g butter
75 g streaky bacon,
diced
1 onion, diced
400 g sliced white mushrooms
4 tomatoes (tinned)
1 tbsp chopped parsley
Approx. 450 g puff pastry (frozen)

For glazing:
1 egg yolk
4 tbsp milk

Method

1. Season the pork with salt, pepper and paprika. Fry in the butter to seal, then remove from the pan.

2. Sauté the onions and bacon in the same pan. Add the sliced mushrooms and the chopped, drained tomatoes. Simmer and season with salt, pepper, parsley and paprika.

3. Roll the pastry out on a floured surface, and make 2 rectangles 30 cm x 20 cm. Place a piece of pork in the middle of each one. Spoon the mushroom mixture onto the meat. Wrap the pastry around the meat to make a parcel, pinching the edges to seal it. Make leaf shapes out of the scraps of pastry to decorate.

4. Place the parcels on a damp glass tray, and glaze them with a mixture of egg yolk and milk. Bake until golden.

5. Cut each parcel in half, then serve.

Settings

Automatic programmes \ Meat \ Pork \ Pork en croûte \ Roast

Duration: Approx. 30 minutes

Fan plus

Temperature: 180–200 °C
Shelf level: 1
Duration: 30–35 minutes + pre-heating

Core temperature when using the food probe: 70 °C

Sirloin joint / Fillet of beef

Serves approx. 6

1 kg joint of beef fillet
Salt and pepper
1 tbsp coarse grained mustard
75 g butter

Method:

1. Season the meat with salt and pepper and spread the mustard over. Dot with butter and place in a roasting dish or the glass tray. Pre-heat the oven and open roast.

2. After roasting, wrap in foil and leave to stand for about 10 minutes. Carve and serve.

Settings

Automatic programmes \ Meat \ Beef \ Fillet of beef (or) Sirloin joint

Duration: Approx. 40 minutes (medium)

Auto roast

Temperature: 190–210 °C
Shelf level: 1
Duration: 35–60 minutes + pre-heating

Conventional heat

Temperature: 200–220 °C
Shelf level: 1
Duration: 35–60 minutes + pre-heating

Core temperature when using the food probe:
Rare 40–45 °C
Medium 50–55 °C
Well done 60–65 °C

Braised beef

Serves approx. 6

1000 g beef fillet
Salt, pepper and paprika
1 onion, diced
1 bay leaf
50 g soft margarine
250 ml beef stock (instant)
250 ml water
125 g crème fraîche
Cornflour

Method

1. Season the meat with salt, pepper and paprika, brush with margarine and place in a roasting dish. Add the onions and bay leaf, cover and cook.

2. After 30 minutes, add some beef stock and crème fraîche, and continue to cook. After 80 minutes, remove the lid and continue to cook uncovered until done.

3. Deglaze the roasting juices with the rest of the stock, crème fraîche and the water. Make the cornflour into a paste with a little water and stir into the stock to thicken. Carve the meat and serve with the gravy.

Settings

Automatic programmes \ Meat \ Beef \ Braised beef

Duration: Approx. 120 minutes

Auto roast

Temperature: 170–190 °C
Shelf level: 1
Duration: 100–120 minutes

Conventional heat

Temperature: 180–200 °C
Shelf level: 1
Duration: 100–120 minutes

Core temperature when using the food: 85–90 °C

Meat loaf

Serves approx. 4

300 g minced beef
300 g good quality pork sausage meat
1 bread roll
2 eggs
2 tbsp sweet paprika
1/2 tsp sharp paprika
Salt and pepper
3 tbsp oil
2 onions, finely diced
50 g bacon, diced
1 red pepper
100 g sliced white mushrooms
125 g Gouda or Cheddar cheese (diced)

Method

1. Heat the oil and the bacon in a pan. Add the onions, and fry gently. Cut the pepper and remove the pith and the seeds. Dice, and add to the bacon and onions along with the mushrooms. Allow the mixture to cool, and then mix in the diced cheese.

2. Soften the bread roll in cold water for approx. 10 minutes. Squeeze it out, and mix with the minced beef, sausage meat, eggs, sweet paprika, sharp paprika, salt and pepper.

3. Add the vegetable mixture to the meat. Mix thoroughly, and form into an oval shape. Transfer to a roasting dish or into the greased glass tray and cook uncovered.

4. After approx. 20 minutes, pour over 1/4 litre liquid.

Settings

Automatic programmes \ Meat \ Meat loaf

Duration: Approx. 35 minutes

MW + Fan plus

Power level/temperature: 300 W + 180 °C
Shelf level: 1
Duration: 35–45 minutes

Fan plus

Temperature: 160–180 °C
Shelf level: 1
Duration: 60–70 minutes

Core temperature when using the food probe: 75–85 °C

Roast veal in a cream sauce

Serves approx. 6

1 kg veal
1 level tsp salt
1/2 tsp white pepper
2 level tsp paprika
Butter or margarine
2 onion, 2 carrots
2 tomatoes
2 calf's bones
250 ml double cream
Cornflour

Method

1. Season the meat with salt, pepper and paprika, brush with margarine and place in a roasting dish. Chop the peeled carrots, the onions and the tomatoes and add to the meat together with the bones (these enhance the flavour).

2. Add approx. 1/4 litre of liquid after about 30 minutes. Repeat this after another 30 minutes. Add the cream at the end.

3. When ready, transfer the meat to a serving dish. Add water to the juices in the pan and thicken with cornflour. Carve the meat, and serve with the gravy.

Settings

Automatic programmes \ Meat \ Veal \ Braised veal \ 1000 g

Duration: Approx. 90 minutes

Auto roast

Temperature: 160–180 °C
Shelf level: 1
Duration: 100–120 minutes

Conventional heat

Temperature: 160–180 °C
Shelf level: 1
Duration: 100–120 minutes

Core temperature when using the food probe: 75–80 °C

Tip: To make a veal roulade, proceed as described above but select the "Veal roulade" Automatic programme.

Veal knuckle

Serves approx. 5

1 joint of veal (shank, approx. 1500 g)
Salt and freshly ground black pepper
40 g melted butter
2 carrots (100 g)
100 g celery
1 onion (50 g)
3 cloves
250 ml hot water
Handful of parsley
2 tbsp sour cream
Cornflour

Method

1. Wash the meat and pat it dry. Season with salt and pepper, and brush with melted butter. Place in a roasting dish or the glass tray. Roast for approx. 60 minutes.

2. Clean and chop the vegetables. Pierce the onion with the cloves, and add to the meat together with the chopped vegetables, the water and the parsley, and cook until done.

3. Transfer the meat and vegetables to a serving dish. Deglaze the roasting juices with water and add the sour cream. Make a paste from the cornflour and a little water and stir into the sauce to thicken it.

Settings

Automatic programmes \ Meat \ Veal \ Veal knuckle \ 1500 g

Duration: Approx. 70 minutes

Auto roast

Temperature: 170–190 °C
Shelf level: 1
Duration: 120–140 minutes

Conventional heat

Temperature: 170–190 °C
Shelf level: 1
Duration: 80–100 minutes

Core temperature when using the food: 80–85 °C

Leg of lamb

Serves approx. 6

1 leg of lamb (approx. 1500 g)
Salt and pepper
3 tsp herbes de Provence
2 cloves of garlic
30 g melted butter
100 ml red wine
50 g sour cream
150 ml beef stock (instant)
Cornflour

Method

1. Remove any outer membrane from the meat, and season with salt, pepper, herbes de Provence and crushed garlic. Brush with melted butter and place in a roasting dish. Cover and roast for approx. 30 minutes.

2. Add the red wine, stock and sour cream and continue to roast without a lid.

3. Place the roast on a serving platter, and leave to stand whilst you make the gravy. Deglaze the roasting juices with water, and thicken with cornflour. Serve with the carved meat.

Settings

Automatic programmes \ Meat \ Lamb \ Leg of lamb

Duration: Approx. 80 minutes

Auto roast

Temperature: 170–190 °C
Shelf level: 1
Duration: 90–120 minutes

Conventional heat

Temperature: 180–200 °C
Shelf level: 1
Duration: 90–120 minutes

Core temperature when using the food probe : 80–85 °C
(or 70–75 °C if you want the meat to be pink)

Saddle of lamb baked in a mustard and herb crust

Serves approx. 6

1200 g saddle of lamb (on the bone)
Salt and pepper
20 g soft butter
125 ml red wine
125 g crème fraîche

For the herb crust:
3 slices of white bread
2 tbsp parsley, chopped
1 tsp thyme, chopped
1 egg
2 tbsp coarse grained mustard

Method

1. To make the herb crust, remove the crusts from the bread, and make into fine breadcrumbs. Blend the breadcrumbs well with the herbs, mustard and egg.

2. Season the meat all over with salt and pepper. Place the joint, meat-side facing upwards, in a roasting dish and brush with melted butter. Roast in the pre-heated oven for approx. 15 minutes, without a lid.

3. Spread the herb mixture over the meat. Add the crème fraîche, half of the red wine and all of the stock to the meat, and continue roasting without a lid for a further 40 minutes.

4. Blend the juices from the meat together with the rest of the wine and some water and thicken with cornflour.

5. Carve the herb crust lengthways and carefully cut the meat from the bone with a sharp knife.

Settings

Automatic programmes \ Meat \ Lamb \ Saddle of lamb

Duration: Approx. 45 minutes

Fan plus

Temperature: 170–190 °C
Shelf level: 1
Duration: 50–60 minutes + pre-heating

Conventional heat

Temperature: 180–200 °C
Shelf level: 1
Duration: 50–70 minutes + pre-heating

Core temperature when using the food probe: 70–80 °C

Duck à l'orange

Serves approx. 4

1 duck (2 kg)
Salt, pepper and chopped thyme
3 oranges, peeled and chopped
2 apples, peeled and diced
1 bay leaf
125 ml white wine
350 ml chicken stock (instant)
125 ml orange juice
Cornflour

To decorate:
1 orange, unpeeled and thinly sliced

Method

1. Wash the duck, pat dry and season with salt, pepper and thyme. Place the oranges and apples inside the duck cavity together with the bay leaf.

2. Place breast side down in a roasting pan, and roast uncovered. Turn halfway through cooking, add a little wine and stock, and continue to roast.

3. Transfer the duck to a serving dish. Deglaze the roasting juices with wine, stock and orange juice, and thicken with cornflour.

4. Carve the duck into portions. Garnish with slices of orange, and serve with the sauce.

Settings

Automatic programmes \ Poultry \ Duck \ 1.5 kg - 2.5 kg

Duration: Approx. 70 minutes

MW + Fan plus

Power level/temperature: 150 W + 180 °C
Shelf level: 1
Duration: 60–80 minutes

Conventional heat

Temperature: 180–200 °C
Shelf level: 1
Duration: 90–110 minutes

Core temperature when using the food: 85–90 °C

Turkey drumsticks with chutney

Serves approx. 2–3

1 turkey drumstick (approx. 1200 g)
Salt and pepper
30 g margarine
200 ml double cream
200 g apricot or mango chutney
250 ml water
1 tin of apricots or mango slices (280 g)

Method

1. Season the turkey with salt and pepper, and place in a roasting dish. Dot with margarine, and roast uncovered for 60 minutes. Pour over the cream, and roast for a further 15 minutes.

2. Add the chutney, and continue to roast for a further 15 minutes. Remove the turkey from the roasting dish.

3. Deglaze the roasting juices with water and thicken with some cornflour paste if required (the sauce will already have been thickened by the chutney).

4. Add the apricot halves or mango slices to the sauce, heat it through and serve with the sliced turkey.

Settings

Automatic programmes \ Poultry \ Turkey \ Turkey leg

Duration: Approx. 80 minutes

Auto roast

Temperature: 170–190 °C
Shelf level: 1
Duration: 90–120 minutes

Core temperature when using the food: 85–90 °C

Stuffed turkey breast

Serves approx. 4

1000 g turkey breast

Stuffing:
100 g mascarpone cheese
60 g (3 tbsp) buckwheat
45 g (3 tbsp) crème fraîche
1 egg yolk
1 small onion (20 g) finely chopped
2 tbsp (10 g) chopped parsley
2 tbsp (10 g) chopped dill
Salt, white pepper, paprika
2 tbsp (20 g) oil
1 clove of garlic

Sauce:
125 ml each of double cream and stock
3 tbsp cornflour

Method

1. Cut a pocket into the side of the turkey breast.

2. To make the stuffing, mix the mascarpone with the buckwheat, crème fraîche, egg yolk, onion and herbs. Season with salt and pepper.

3. Insert the mixture into the pocket. Secure with cocktail sticks or kitchen string.

4. Crush the garlic with a little salt, then mix with pepper, paprika and oil to make a paste. Brush the turkey generously with the paste. Place in a roasting pan, and roast uncovered, turning occasionally.

5. Deglaze the roasting juices with cream and stock, thicken with cornflour, and serve with the sliced turkey.

Settings

Automatic programmes \ Poultry \ Turkey \ Turkey breast

Duration: Approx. 60 minutes

Auto roast

Temperature: 170–190 °C
Shelf level: 1
Duration: 70–80 minutes

Conventional heat

Temperature: 180–200 °C
Shelf level: 1
Duration: 70–80 minutes

Core temperature when using the food probe: 80–85 °C

Stuffed turkey

Serves approx. 8

1 oven-ready turkey (approx. 3500 g)
Salt
Sour cream or crème fraîche
Cornflour

Stuffing:
30 ml oil
3 (150 g) onions, diced
125 g rice
150 g pistachio nuts
150 g raisins
2 tbsp Madeira

Sauce:
125 ml each of double cream and stock
3 tbsp cornflour

Method

1. Cook the rice. Whilst it is cooking, soak the raisins in the Madeira. Gently fry the diced onions in the oil. Add the rice, nuts and raisins/Madeira, and mix well.

2. Stuff the prepared turkey with the mixture. Rub the outside of the turkey with salt, and place breast side down on the glass tray.

3. Turn after one hour and baste with fat. Continue to baste every 30 minutes with the juices from the meat.

4. Make a gravy from the meat juices, water, sour cream or crème fraîche and some cornflour paste, and season to taste.

Settings

Automatic programmes \ Poultry \ Turkey \ Whole, stuffed

Duration: Approx. 160 minutes

Auto roast

Temperature: 160–180 °C
Shelf level: 1
Duration: 150–180 minutes

Conventional heat

Temperature: 180–200 °C
Shelf level: 1
Duration: 150–180 minutes

Core temperature when using the food probe: 85 °C

Chicken

Serves approx. 2

1 chicken (approx. 1000 g)
Salt, paprika, curry powder
2–3 tbsp oil
100 ml double cream or crème fraîche
Cornflour

Method

1. Mix the oil with the salt, pepper and curry powder. Brush over the chicken. Place breast side down in a roasting pan and roast uncovered. After 20 minutes, turn the meat, add some cream or crème fraîche, and continue to roast uncovered.

2. Deglaze the juices from the meat with the rest of the cream/crème fraîche and some water, and thicken with cornflour paste. Carve the chicken and serve with the sauce.

Settings

Automatic programmes \ Poultry \ Chicken \ Whole \ 0.8 kg - 1.2 kg

Duration: Approx. 50 minutes

MW + Fan plus

Power level/temperature: 300 W + 180 °C
Shelf level: 1
Duration: 35–45 minutes

Fan grill

Temperature: 180–200 °C
Shelf level: 1
Duration: 60–70 minutes

Core temperature when using the food: 85–90 °C

Chicken in a mustard cream sauce

Serves approx. 2

250 g crème fraîche
4 tbsp coarse grained mustard
1 clove of garlic, crushed
Salt
1/2 tsp sage leaves, chopped
4 chicken breasts (each approx. 125 g)

Method

1. Mix together the crème fraîche, mustard, garlic, salt and sage in a bowl.

2. Coat the chicken with the sauce, and transfer to the glass tray. Cover and cook for 4 minutes at 850 W and then for a further 12 minutes at 450 W.

3. Turn halfway through cooking, and baste with the sauce.

Settings

Automatic programmes \ Poultry \ Cook poultry with MW \ 800 g

Duration: Approx. 11 minutes

Microwave

Power level: 850 W + 450 W
Shelf level: 1
Duration: 5 minutes + 12 minutes

Haunch of hare

Serves approx. 2

2 haunches of hare
(total weight approx. 750 g)
500 ml buttermilk
Salt and pepper
6 juniper berries
2 bay leaves
50 g streaky bacon (in slices)
50 ml red wine
100 ml double cream or sour cream
150 ml water
Cornflour

Method

1. Marinate the hare for about 12 hours in the buttermilk, turning frequently.

2. Peel off any outer membranes, then season with salt and pepper, wrap in the slices of bacon and place in a roasting pan. Scatter over the juniper berries and bay leaves. Cover and roast for approx. 15 minutes in the oven. Turn the meat and add some of the red wine, water and cream. Continue roasting without the lid, then transfer to a serving dish.

3. Add the rest of the wine, cream and water to the juices in the pan and thicken with cornflour paste. Serve with the meat.

Settings

Automatic programmes \ Game \ Haunch of hare

Duration: Approx. 55 minutes

Auto roast

Temperature: 180–200 °C
Shelf level: 1
Duration: 50–60 minutes

Conventional heat

Temperature: 200–220 °C
Shelf level: 2
Duration: 50–60 minutes

Core temperature when using the food probe: 75–80 °C

Saddle of hare

Serves approx. 2

1 saddle of hare (approx. 750 g)
Salt and pepper
50 g streaky bacon
(in slices)
2 bay leaves
6 juniper berries
100 ml double cream
3 tbsp red wine
150-400 ml beef stock (instant)
Cornflour

Method

1. Remove any outer membrane from the hare and season with salt and pepper. Wrap in slices of bacon, and place in a roasting dish. Scatter the berries and bay leaves over the top. Cover and roast for approx. 20 minutes.

2. Turn the meat over, add the cream and finish roasting without the lid.

3. Transfer the meat to a warm serving dish, and carve, removing the bones. Deglaze the juices from the meat with the red wine and water and thicken with a little cornflour.

Settings

Automatic programmes \ Game \ Saddle of hare

Duration: Approx. 50 minutes

Auto roast

Temperature: 180–200 °C
Shelf level: 1
Duration: 45–55 minutes

Conventional heat

Temperature: 200–220 °C
Shelf level: 2
Duration: 45–55 minutes + pre-heating

Core temperature when using the food probe: 72–80 °C

Rabbit in a mustard sauce

Serves approx. 4–6

1300 g rabbit (saddle or haunch)
Salt and freshly ground black pepper
3 tbsp Dijon mustard
100 g bacon, diced
30 g butter
1 tbsp flour
2 onions, finely diced
250 ml white wine
1 tsp dried thyme, ground
3 tbsp crème fraîche

Method

1. Season the rabbit with salt and pepper, and spread over 2 tbsp mustard.

2. Fry the bacon in the butter in a roasting pan, then add the rabbit and continue to fry, turning the meat until it is nicely browned. Sprinkle in the flour. Add the onions, thyme and wine, stirring to blend the ingredients. Transfer to a suitable roasting pan and roast uncovered in the oven.

3. Transfer the meat to a serving dish. Add the rest of the mustard, the crème fraîche and, if required, some water to the juices in the pan and thicken with cornflour. Place the roast on a serving platter, and leave to stand whilst you make the gravy. Add water to the juices from the meat and thicken with cornflour.

Settings

Automatic programmes \ Game \ Rabbit pieces

Duration: Approx. 35 minutes

Fan plus

Temperature: 170–190 °C
Shelf level: 1
Duration: 30–35 minutes

Saddle of roebuck or venison

Serves approx. 6

2000 g saddle of roebuck or venison
11/2–2 litres of buttermilk
8 juniper berries
2 bay leaves
3 peppercorns, crushed
Salt and pepper
30 g melted butter
100 g streaky bacon (in slices)
125 ml red wine
500 ml water
125 g crème fraîche or
sour cream
Cornflour
6 pear halves
6 tsp cranberry sauce

Method

1. Trim the meat of any outer membranes and marinate for 24 hours in buttermilk, turning frequently. Rinse the meat in cold water and pat dry. Season with salt and pepper, brush with melted butter and wrap in the slices of bacon.

2. Place in a roasting pan, and scatter the crushed peppercorns, juniper berries and bay leaves over the top. Cover and roast in the oven for 15 minutes. Add some of the red wine, the water and crème fraîche and continue to roast without a lid.

3. Blend the juices from the meat with the rest of the red wine, crème fraîche and water, and thicken with some cornflour paste. Carve the meat, and place on a serving dish. Pour the sauce over.

4. Warm the pears, and arrange around the carved meat with the rounded side downwards. Fill with a spoonful of cranberry sauce and serve.

Settings

Automatic programmes \ Game \ Roebuck saddle or Venison saddle

Duration: Approx. 75 minutes

Auto roast

Temperature: 170–190 °C
Shelf level: 1
Duration: 70–100 minutes

Conventional heat

Temperature: 180–200 °C
Shelf level: 1
Duration: 70–100 minutes

Core temperature when using the food probe: 70–78 °C

United Kingdom
Miele Co. Ltd.
Fairacres, Marcham Road
Abingdon, Oxon, OX14 1TW
Tel: 0845 365 0555
Customer Contact Centre Tel: 0845 365 6600
E-mail: info@miele.co.uk
Internet: www.miele.co.uk

Australia
Miele Australia Pty. Ltd.
ABN 96 005 635 398
1 Gilbert Park Drive, Knoxfield, VIC 3180
Tel: 1300 464 353, Fax: (03) 9764 7149
Internet: www.miele.com.au

China
Miele (Shanghai) Trading Ltd.
1-3 Floor, No. 82 Shi Men Yi Road
Jing' an District
200040 Shanghai, PRC
Tel: +86 21 6157 3500, Fax: +86 21 6157 3511
E-mail: info@miele.cn
Internet: www.miele.cn

Miele (Hong Kong) Limited
41/F - 4101, Manhattan Place
23 Wang Tai Road
Kowloon Bay
Hong Kong
Tel: (852) 2610 1331, Fax: (852) 2610 1013
Email: mielehk@miele.com.hk

India
Miele India Pvt. Ltd.
Ground Floor, Copia Corporate Suites
Plot No. 9, Jasola
New Delhi – 110025
Tel: 011-46 900 000, Fax: 011-46 900 001
E-mail: customercare@miele.in, Internet: www.miele.in

Ireland
Miele Ireland Ltd.
2024 Bianconi Avenue
Citywest Business Campus, Dublin 24
Tel: (01) 461 07 10, Fax: (01) 461 07 97
E-Mail: info@miele.ie, Internet: www.miele.ie

Manufacturer: Miele & Cie. KG
Carl-Miele-Straße 29, 33332 Gütersloh, Germany

Malaysia
Miele Sdn Bhd
Suite 12-2, Level 12
Menara SapuraKencana Petroleum
Solaris Dutamas No. 1, Jalan Dutamas 1
50480 kuala Lumpur, Malaysia
Phone: +603-6209-0288
Fax: +603-6205-3768

New Zealand
Miele New Zealand Limited
8 College Hill
Freemans Bay, Auckland 1011, NZ
Tel: 0800 264 353, Fax: 0800 463 453
Internet: www.miele.co.nz

Singapore
Miele Southeast Asia
Miele Pte. Ltd.
163 Penang Road
04 - 02/03 Winsland House II
Singapore 238463
Tel: +65 6735 1191, Fax: +65 6735 1161
E-Mail: infosea@miele.com.sg
Internet: www.miele.sg

South Africa
Miele (Pty) Ltd
63 Peter Place, Bryanston 2194
P.O. Box 69434, Bryanston 2021
Tel: (011) 875 9000, Fax: (011) 875 9035
E-mail: info@miele.co.za
Internet: www.miele.co.za

United Arab Emirates
Miele Appliances Ltd.
P.O. Box 11 47 82
Gold & Diamond Park
Sheikh Zayed Road
Building 6 / Offices Nos. 6-214 to 6-220
Dubai
Tel: +971-4-341 84 44
Fax: +971-4-341 88 52
E-Mail: info@miele.ae, Internet: www.miele.ae

Miele

H6500BM; H6600BM

CE

en - GB

M.-Nr. 09 610 330 / 01