Register your new Bosch now:
www.bosch-home.com/welcome

Compact oven with microwave function
CMG656B.6B

BOSCH

[en] Instruction manual

Table of contents

Intended use . . . 5

Important safety information . . . 5
General information . . . 5
Microwave . . . 6
Cleaning function . . . 7

Causes of damage . . . 7
General information . . . 7
Microwave . . . 8

Environmental protection . . . 8
Saving energy . . . 8
Environmentally-friendly disposal . . . 8

Getting to know your appliance . . . 9
Control panel . . . 9
Controls . . . 9
Display . . . 10
Operating modes . . . 10
Types of heating . . . 11
Microwave . . . 12
Further information . . . 12
Cooking compartment functions . . . 12

Accessories . . . 13
Accessories included . . . 13
Inserting accessories . . . 13
Optional accessories . . . 13

Before using for the first time . . . 14
Initial use . . . 14
Cleaning the cooking compartment and accessories 14

Operating the appliance . . . 15
Switching the appliance on and off . . . 15
Starting the operation . . . 15
Selecting an operating mode . . . 16
Setting the type of heating and temperature . . . 16
Rapid heating . . . 16

Time-setting options . . . 17
Setting the cooking time . . . 17
Setting the end time . . . 17
Setting the timer . . . 18

Microwave . . . 19
Cookware . . . 19
Microwave power settings . . . 19
Setting the microwave . . . 19
Setting MicroCombi . . . 20
Drying . . . 20

Childproof lock . . . 21
Activating and deactivating . . . 21

Basic settings . . . 21
Changing the basic settings . . . 21
List of basic settings . . . 21
Power cut . . . 22
Changing the time . . . 22

Sabbath mode . . . 23
Starting Sabbath mode . . . 23

Home Connect . . . 23
Setting up . . . 23
Remote Start . . . 25
Home Connect settings . . . 25
About data protection . . . 26
Declaration of Conformity . . . 26

Cleaning agent . . . 27
Suitable cleaning agents . . . 27
Surfaces in the cooking compartment . . . 28
Keeping the appliance clean . . . 28

Cleaning function . . . 28
EcoClean Direct . . . 28
Drying . . . 29

Rails . . . 30
Detaching and refitting the rails . . . 30

Appliance door . . . 31
Removing the door cover . . . 31
Removing and fitting the door panels . . . 31

Trouble shooting . . . 33
Rectifying faults yourself . . . 33
Maximum operating time . . . 33
Cooking compartment bulbs . . . 33

Customer service . . . 34
E number and FD number . . . 34

Dishes . . . 34
Information on the settings . . . 34
Selecting a dish . . . 35
Applying settings for dishes . . . 35

Tested for you in our cooking studio 36
Silicone moulds 36
Baking 36
Roasting and braising 38
Grilling 41
Convenience products 44
Microwave 46
Yogurt 47
Save energy with Eco heating types 48
Acrylamide in foodstuffs. 49
Slow cook 49
Drying. 50
Preserving 51
Prove dough. 52
Defrosting. 52
Heating food in a microwave 54
Keeping warm 55
Test dishes. 56

Additional information on products, accessories, replacement parts and services can be found at **www.bosch-home.com** and in the online shop **www.bosch-eshop.com**

Intended use

Read these instructions carefully. Only then will you be able to operate your appliance safely and correctly. Retain the instruction manual and installation instructions for future use or for subsequent owners.

This appliance is only intended to be fully fitted in a kitchen. Observe the special installation instructions.

Check the appliance for damage after unpacking it. Do not connect the appliance if it has been damaged in transport.

Only a licensed professional may connect appliances without plugs. Damage caused by incorrect connection is not covered under warranty.

This appliance is intended for domestic use only. The appliance must only be used for the preparation of food and drink. The appliance must be supervised during operation. Only use this appliance indoors.

This appliance is intended for use up to a maximum height of 2000 metres above sea level.

This appliance may be used by children over the age of 8 years old and by persons with reduced physical, sensory or mental capabilities or by persons with a lack of experience or knowledge if they are supervised or are instructed by a person responsible for their safety how to use the appliance safely and have understood the associated hazards.

Children must not play with, on, or around the appliance. Children must not clean the appliance or carry out general maintenance unless they are at least 8 years old and are being supervised.

Keep children below the age of 8 years old at a safe distance from the appliance and power cable.

Always slide accessories into the cooking compartment the right way round.
→ *"Accessories" on page 13*

Important safety information

General information

⚠ Warning – Risk of fire!

- Combustible items stored in the cooking compartment may catch fire. Never store combustible items in the cooking compartment. Never open the appliance door if there is smoke inside. Switch off the appliance and unplug it from the mains or switch off the circuit breaker in the fuse box.
- A draught is created when the appliance door is opened. Greaseproof paper may come into contact with the heating element and catch fire. Do not place greaseproof paper loosely over accessories during preheating. Always weight down the greaseproof paper with a dish or a baking tin. Only cover the surface required with greaseproof paper. Greaseproof paper must not protrude over the accessories.

⚠ Warning – Risk of burns!

- The appliance becomes very hot. Never touch the interior surfaces of the cooking compartment or the heating elements. Always allow the appliance to cool down. Keep children at a safe distance.
- Accessories and ovenware become very hot. Always use oven gloves to remove accessories or ovenware from the cooking compartment.
- Alcoholic vapours may catch fire in the hot cooking compartment. Never prepare food containing large quantities of drinks with a high alcohol content. Only use small quantities of drinks with a high alcohol content. Open the appliance door with care.

⚠ Warning – Risk of scalding!

- The accessible parts become hot during operation. Never touch the hot parts. Keep children at a safe distance.
- When you open the appliance door, hot steam can escape. Steam may not be visible, depending on its temperature. When opening, do not stand too close to the appliance. Open the appliance door carefully. Keep children away.
- Water in a hot cooking compartment may create hot steam. Never pour water into the hot cooking compartment.

⚠ Warning – Risk of injury!

- Scratched glass in the appliance door may develop into a crack. Do not use a glass scraper, sharp or abrasive cleaning aids or detergents.
- The hinges on the appliance door move when opening and closing the door, and you may be trapped. Keep your hands away from the hinges.

⚠ Warning – Risk of electric shock!

- Incorrect repairs are dangerous. Repairs may only be carried out and damaged power cables replaced by one of our trained after-sales technicians. If the appliance is defective, unplug the appliance from the mains or switch off the circuit breaker in the fuse box. Contact the after-sales service.
- The cable insulation on electrical appliances may melt when touching hot parts of the appliance. Never bring electrical appliance cables into contact with hot parts of the appliance.
- Do not use any high-pressure cleaners or steam cleaners, which can result in an electric shock.
- A defective appliance may cause electric shock. Never switch on a defective appliance. Unplug the appliance from the mains or switch off the circuit breaker in the fuse box. Contact the after-sales service.

⚠ Warning – Hazard due to magnetism!

Permanent magnets are used in the control panel or in the control elements. They may affect electronic implants, e.g. heart pacemakers or insulin pumps. Wearers of electronic implants must stay at least 10 cm away from the control panel.

Microwave

⚠ Warning – Risk of fire!

- Using the appliance for anything other than its intended purpose is dangerous and may cause damage.
  The following is not permitted: drying out food or clothing, heating slippers, grain or cereal pillows, sponges, damp cleaning cloths or similar.
  For example, heated slippers and grain or cereal pillows may catch fire, even several hours after they have been heated.The appliance must only be used for the preparation of food and drinks.
- Food may catch fire. Never heat food in heat-retaining packages.
  Do not leave food heating unattended in containers made of plastic, paper or other combustible materials.
  Do not select a microwave power or time setting that is higher than necessary. Follow the information provided in this instruction manual.
  Never use the microwave to dry food.
  Never defrost or heat food with a low water content, e.g. bread, at too high a microwave power or for too long.
- Cooking oil may catch fire. Never use the microwave to heat cooking oil on its own.

⚠ Warning – Risk of explosion!

Liquids and other food may explode when in containers that have been tightly sealed. Never heat liquids or other food in containers that have been tightly sealed.

⚠ Warning – Risk of burns!

- Foods with peel or skin may burst or explode during, or even after, heating. Never cook eggs in their shells or reheat hard-boiled eggs. Never cook shellfish or crustaceans. Always prick the yolk when baking or poaching eggs. The skin of foods that have a peel or skin, such as apples, tomatoes, potatoes and sausages, may burst. Before heating, prick the peel or skin.
- Heat is not distributed evenly through baby food. Never heat baby food in closed containers. Always remove the lid or teat. Stir or shake well after the food has been heated. Check the temperature of the food before it is given to the child.
- Heated food gives off heat. The ovenware may become hot. Always use oven gloves to remove ovenware or accessories from the cooking compartment.
- Airtight packaging may burst when food is heated. Always observe the instructions on the packaging. Always use oven gloves to remove dishes from the cooking compartment.

⚠ Warning – Risk of scalding!
There is a possibility of delayed boiling when a liquid is heated. This means that the liquid reaches boiling temperature without the usual steam bubbles rising to the surface. Even if the container only vibrates a little, the hot liquid may suddenly boil over and spatter. When heating, always place a spoon in the container. This will prevent delayed boiling.

⚠ Warning – Risk of injury!
Unsuitable ovenware may crack. Porcelain or ceramic ovenware can have small perforations in the handles or lids. These perforations conceal a cavity below. Any moisture that penetrates this cavity could cause the ovenware to crack. Only use microwave-safe ovenware.

⚠ Warning – Risk of electric shock!
The appliance is a high-voltage appliance. Never remove the casing.

⚠ Warning – Risk of serious damage to health!

- The surface of the appliance may become damaged if it is not cleaned properly. Microwave energy may escape. Clean the appliance on a regular basis, and remove any food residue immediately. Always keep the cooking compartment, door seal, door and door stop clean.
- Microwave energy may escape if the cooking compartment door or the door seal is damaged. Never use the appliance if the cooking compartment door, the door seal or the plastic door frame is damaged. Call the after-sales service.
- Microwave energy will escape from appliances that do not have any casing. Never remove the casing. For any maintenance or repair work, contact the after-sales service.

Cleaning function

⚠ Warning – Risk of burns!
⚠ The appliance will become very hot on the outside during the cleaning function. Never touch the appliance door. Allow the appliance to cool down. Keep children away from the appliance.

Causes of damage

General information

Caution!

- Accessories, foil, greaseproof paper or ovenware on the cooking compartment floor: do not place accessories on the cooking compartment floor. Do not cover the cooking compartment floor with any sort of foil or greaseproof paper. Do not place ovenware on the cooking compartment floor if a temperature of over 50 °C has been set. This will cause heat to accumulate. The baking and roasting times will no longer be correct and the enamel will be damaged.
- Aluminium foil: Aluminium foil in the cooking compartment must not come into contact with the door glass. This could cause permanent discolouration of the door glass.
- Water in a hot cooking compartment: do not pour water into the cooking compartment when it is hot. This will cause steam. The temperature change can cause damage to the enamel.
- Moisture in the cooking compartment: Over an extended period of time, moisture in the cooking compartment may lead to corrosion. Allow the cooking compartment to dry after use. Do not keep moist food in the closed cooking compartment for extended periods of time. Do not store food in the cooking compartment.
- Cooling with the appliance door open: Following operation at high temperatures, only allow the cooking compartment to cool down with the door closed. Do not trap anything in the appliance door. Even if the door is only left open a crack, the front of nearby furniture may become damaged over time. Only leave the cooking compartment to dry with the door open if a lot of moisture was produced whilst the oven was operating.
- Fruit juice: when baking particularly juicy fruit pies, do not pack the baking tray too generously. Fruit juice dripping from the baking tray leaves stains that cannot be removed. If possible, use the deeper universal pan.
- Extremely dirty seal: If the seal is very dirty, the appliance door will no longer close properly during operation. The fronts of adjacent units could be damaged. Always keep the seal clean.
- Appliance door as a seat, shelf or worktop: Do not sit on the appliance door, or place or hang anything on it. Do not place any cookware or accessories on the appliance door.
- Inserting accessories: depending on the appliance model, accessories can scratch the door panel when closing the appliance door. Always insert the accessories into the cooking compartment as far as they will go.
- Carrying the appliance: do not carry or hold the appliance by the door handle. The door handle cannot support the weight of the appliance and could break.

Microwave

Caution!

- Creation of sparks: Metal – e.g. a spoon in a glass – must be kept at least 2 cm from the cooking compartment walls and the inside of the door. Sparks can irreparably damage the glass on the inside of the door.
- Combining accessories: Do not combine the wire rack with the universal pan. Sparks may be created if they are inserted directly on top of one another. Only insert them into their own shelf level.
- Microwave only: The universal pan and baking tray are unsuitable when using the microwave only. If you use either of these, this may create sparks, which may damage the cooking compartment. Place cookware on the wire rack provided, or place it in the microwave and set a type of heating.
- Foil containers: Do not use foil containers in the appliance. They damage the appliance by producing sparks.
- Operating the microwave without food: Operating the appliance without food in the cooking compartment may lead to overloading. Never switch on the microwave unless there is food inside. The short crockery test is the exception to this rule.
  → *"Microwave" on page 19*

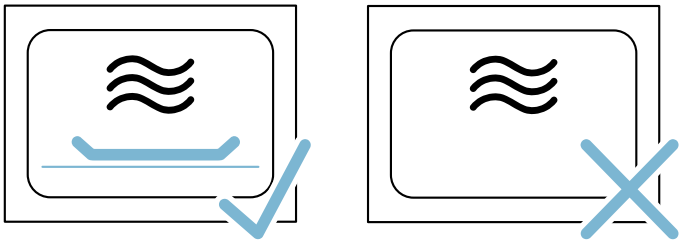

- Microwave popcorn: Never set the microwave output too high. Use a maximum microwave output of 600 watts. Always place the popcorn bag on a glass plate. The door panels may jump if overloaded.

Environmental protection

Your new appliance is particularly energy-efficient. Here you can find tips on how to save even more energy when using the appliance, and how to dispose of your appliance properly.

Saving energy

- Only preheat the appliance if this is specified in the recipe or in the tables in the operating instructions.
- Use dark, black lacquered or enamelled baking tins. They absorb heat particularly well.
- Open the appliance door as infrequently as possible during operation.
- It is best to bake several cakes one after the other. The cooking compartment is still warm. This reduces the baking time for the second cake. You can place two cake tins next to each other in the cooking compartment.
- For longer cooking times, you can switch the appliance off 10 minutes before the end of the cooking time and use the residual heat to finish cooking.

Environmentally-friendly disposal

Dispose of packaging in an environmentally-friendly manner.

This appliance is labelled in accordance with European Directive 2012/19/EU concerning used electrical and electronic appliances (waste electrical and electronic equipment - WEEE). The guideline determines the framework for the return and recycling of used appliances as applicable throughout the EU.

Getting to know your appliance

In this chapter, we will explain the displays and controls. You will also find out about the various functions of your appliance.

Note: Depending on the appliance model, individual details and colours may differ.

Control panel

In the control panel, you can use the various buttons, touch fields, touch-screen displays and the rotary selector to set the different appliance functions. The current settings are shown on the display.

The overview shows the control panel when the appliance is switched on with the menu display.

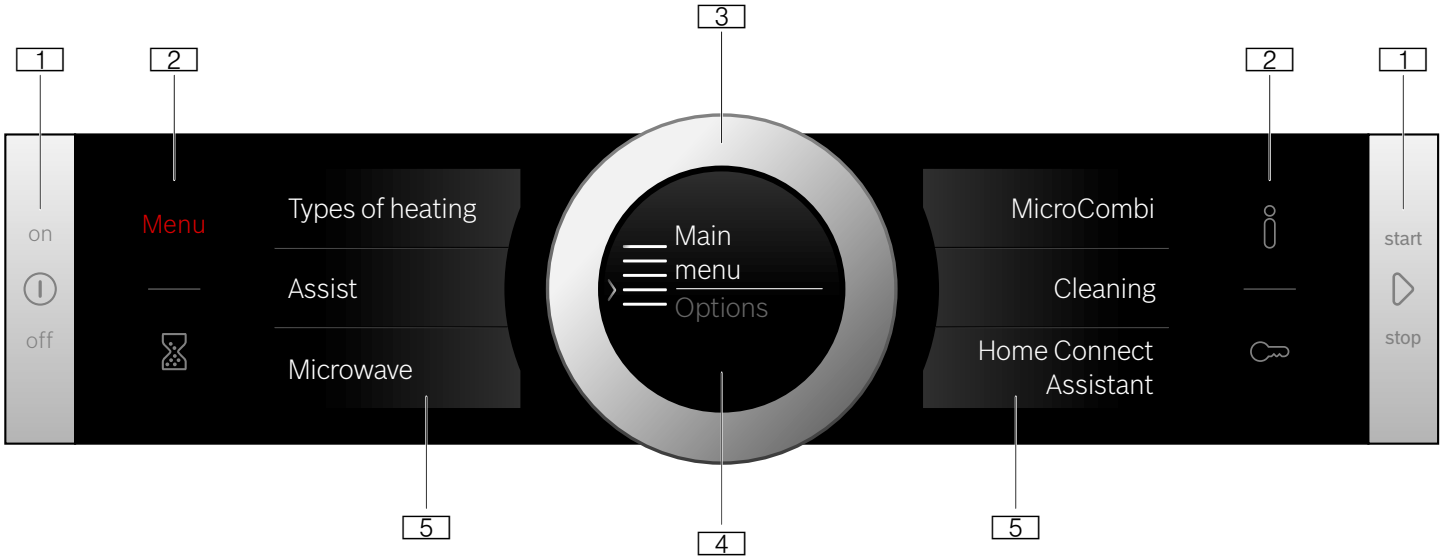

1 **Buttons**
The buttons on the left- and right-hand side of the control panel have a pressure point. Press these buttons to activate them.
For appliances that do not have a stainless steel front, these two button touch fields do not have a pressure point.

2 **Touch fields**
There are sensors under the touch fields. Simply touch the respective symbol to select the function.

3 **Rotary selector**
The rotary selector is fitted so that you can turn it indefinitely to the left or right. Press it lightly and move it in the direction required using your finger.

4 **Display**
You can see the current adjustment values, options or notes in the display.

5 **Touch-screen displays**
You can see the current selection options in the touch-screen displays. You can select these here directly by touching the appropriate text field. The text fields change depending on the selection.

Controls

The individual controls are adapted for the various functions of your appliance. You can set your appliance simply and directly.

Buttons and touch fields

Here you can find a short explanation of the various buttons and touch fields.

Symbol		Meaning
Buttons		
⏻	on/off	Switching the appliance on and off
▷	Start/Stop	Starting, pausing or cancelling (hold down for approx. 3 secs) an operation
Touch fields		
Menu	Menu	Opens the "Operating modes" menu
⌛	Timer	Selects the timer
i	Information	Displays information
🔑	Childproof lock	Activating and deactivating (hold down for approx. 4 secs) the childproof lock

Rotary selector

You can use the rotary selector to change the setting values shown on the display.

You can also use the rotary selector to scroll through the selection lists on the touch-screen displays.

In most selection lists, you have to turn the rotary selector in the opposite direction once you reach the beginning or the end of the list.

Display

The display is structured so that the information can be read at a glance in any situation.

The value that you can currently set is highlighted in white text in the display. The value in the background is displayed in grey text.

Highlighted information	The highlighted value can be changed immediately without first being selected. After starting an operation, either the temperature or level remains highlighted. The white line also serves as the heating line and gradually turns red. **Note:** When using the Microwave operating mode, the cooking time is highlighted. The heating line does not appear.
Enlargement	As long as you use the rotary selector to change the highlighted value, only this value will be displayed larger.

Display ring

The display ring can be found around the outside of the display.

If you change a value, the display ring shows you where you are in the selection list. Depending on the settings area and length of the selection list, the display ring may be continuous or divided into segments.

During operation, the display ring turns red at second-long intervals. After every full minute, the segments turn red again from the beginning. As the cooking time counts down, one segment disappears every second.

Temperature display

After the operation has started, the current cooking compartment temperature is displayed graphically on the display.

Heating line	The white line under the temperature turns red from left to right as the cooking compartment heats up. When you are preheating the appliance, the optimal time to place the food in the cooking compartment is when the line has completely turned red. For set levels, e.g. the grill setting, the heating line turns red immediately.
Residual heat indicator	When the appliance is switched off, the display ring shows the residual heat in the cooking compartment. As the residual heat cools down, the display ring becomes darker and disappears completely at some point.

Note: Due to thermal inertia, the temperature displayed may be slightly different to the actual temperature inside the oven.

Touch-screen displays

The touch-screen displays are both a display medium and control element at the same time. They show the options that you can select for a function and the current setting. To select a function, simply touch the text field directly.

The function currently selected is identified by a red vertical bar next to it. Its corresponding value is highlighted in white on the display.

The small red arrow next to the text field shows the functions to which you can scroll forwards or backwards.

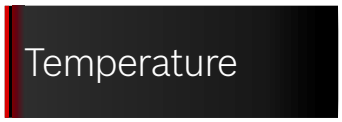

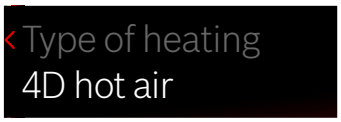

Operating modes

Your appliance has various operating modes which make your appliance easier to use.

You can find more precise descriptions of these in the corresponding sections.

Operating mode	Use
Heating types → *"Operating the appliance" on page 15*	There are various finely tuned heating types for the optimal preparation of your food.
Assist → *"Dishes" on page 34*	For many dishes, there are preprogrammed setting values.
Microwave → *"Microwave" on page 19*	You can use the microwave to cook, heat up or defrost your dishes more quickly.
MicroCombi → *"Microwave" on page 19*	You can use the microwave combination function to switch on the microwave and a type of heating.
Cleaning → *"Cleaning function" on page 28*	There are several cleaning functions available: EcoClean Direct and Drying.
Home Connect Assistant → *"Home Connect" on page 23*	This function allows you to connect your oven with a mobile device.
Basic settings → *"Basic settings" on page 21*	You can change your appliance's basic settings to suit your needs.

Types of heating

To enable you to find the correct type of heating for your dish, we have explained the differences and scopes of application here.

The symbols for each type of heating help you to remember them.

When cooking at very high temperatures, the appliance lowers the temperature slightly after an extended period.

Heating type		Temperature	Use
	4D hot air	30-275 °C	For baking and roasting on one or more levels. The fan distributes heat from the ring heating element in the back panel evenly around the cooking compartment.
	Top/bottom heating	30-300 °C	For traditional baking and roasting on one level. Especially suitable for cakes with moist toppings. Heat is emitted evenly from the top and bottom.
eco	Hot air eco	30-275 °C	For energy-optimised cooking of selected dishes on one level without preheating. The fan distributes the energy-optimised heat from the ring heating element in the back wall evenly around the cooking compartment.
eco	Top/bottom heating eco	30-300 °C	For energy-optimised cooking of selected dishes. Heat is emitted evenly from the top and bottom.
	Hot air grilling	30-300 °C	For roasting poultry, whole fish and larger pieces of meat. The grill element and the fan switch on and off alternately. The fan circulates the hot air around the food.
	Grill, large area	Grill settings: 1 = low 2 = medium 3 = high	For grilling flat items for grilling, such as steaks and sausages, for making toast, and for cooking au gratin. The whole area below the grill element becomes hot.
	Grill, small area	Grill settings: 1 = low 2 = medium 3 = high	For grilling small amounts of steaks or sausages, for making toast, and for cooking au gratin. The centre area under the grill heating element becomes hot.
	Pizza setting	30-275 °C	For preparing pizza and dishes which require a lot of heat from underneath. The bottom heating element and the ring heating element in the back panel heat up.
	Slow cooking	70-120 °C	For gentle and slow cooking of seared, tender pieces of meat in ovenware without a lid. The heat is emitted evenly from the top and bottom at low temperatures.
	Bottom heating	30-250 °C	For cooking in a bain marie and for the final baking stage. The heat is emitted from below.
	Keeping warm	60-100 °C	For keeping cooked food warm.
	Preheating ovenware	30-70 °C	For preheating ovenware.

Default values

For each heating type, the appliance specifies a default temperature or level. You can accept this value or change it in the appropriate area.

Microwave

To ensure that you always use the correct microwave power setting, we have provided a general overview of what the different power settings can be used for below.

Microwave power setting	Maximum cooking time	Use
90 watts	1 hour 30 mins	For defrosting delicate foods.
180 watts	1 hour 30 mins	For defrosting and continued cooking.
360 watts	1 hour 30 mins	For cooking meat and for heating delicate foods.
600 watts	1 hour 30 mins	For heating and cooking food.
1000 watts	30 minutes	For heating liquids.

MicroCombi

Various types of heating can be combined with the Microwave operating mode. The appliance heats up and the microwave is switched on at the same time. As a result, the food is ready in a much shorter time.

Microwave power settings between 90 and 360 watts are suitable for this.

Further information

In most cases, the appliance provides notes and further information on the action just carried out.

Touch the ℹ field. The note is shown in the display for a few seconds. Use the rotary selector to scroll to the end of longer notes.

Some notes are displayed automatically, for example as confirmation, or to provide an instruction or warning.

Cooking compartment functions

The functions in the cooking compartment make your appliance easier to use. This, for example, enables the cooking compartment to be well lit and a cooling fan to prevent the appliance from overheating.

Opening the appliance door

If you open the appliance door during an operation, the operation is paused. The operation continues to run when you close the door.

Note: When using the Microwave operating mode, you must touch the ▷ Start/Stop button once the door has been closed to resume the operation. You can change the basic setting for this. ⟶ *"Basic settings" on page 21*

Interior lighting

When you open the appliance door, the interior lighting switches on. If the door remains open for longer than around 15 minutes, the lighting switches off again.

For most operating modes, the interior lighting switches on as soon as the operation is started. When the operation has finished, the lighting switches off.

Note: You can set the interior lighting not to come on during the operation in the basic settings. ⟶ *"Basic settings" on page 21*

Cooling fan

The cooling fan switches on and off as required. The hot air escapes above the door.

Caution!
Do not cover the ventilation slots. Otherwise, the appliance may overheat.

So that the cooking compartment cools down more quickly after the operation, the cooling fan continues to run for a certain period afterwards.

Note: You can change how long the cooling fan continues to run in the basic settings. ⟶ *"Basic settings" on page 21*

Accessories

Your appliance is accompanied by a range of accessories. Here, you can find an overview of the accessories included and information on how to use them correctly.

Accessories included

Your appliance is equipped with the following accessories:

	Wire rack For ovenware, cake tins and ovenproof dishes. For roasts and grilled food. The wire rack is suitable for use in the microwave.
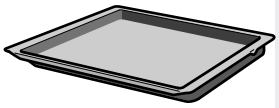	**Universal pan** For moist cakes, pastries, frozen meals and large roasts. It can be used to catch dripping fat when you are grilling directly on the wire rack.

Only use original accessories. They are specially adapted for your appliance.

You can buy accessories from the after-sales service, from specialist retailers or online.

Note: The accessories may deform when they become hot. This does not affect their function. Once they have cooled down again, they regain their original shape.

Microwave

Only the wire rack provided is suitable when using the microwave only. If you use the universal pan or the baking tray, this may create sparks, which may damage the cooking compartment.

When using the appliance in combination with the microwave or "Dishes" mode, you can use the universal pan, baking tray or any other accessories that have been included with the appliance.

Inserting accessories

The cooking compartment has three shelf positions. The shelf positions are counted from the bottom up.

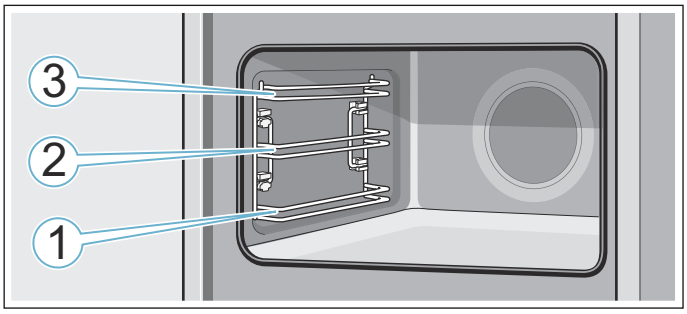

When using positions 1, 2 and 3, always insert the accessory between the two guide rods for a shelf position.

Notes

- Ensure that you always insert the accessories into the cooking compartment the right way round.
- Always insert the accessories fully into the cooking compartment so that they do not touch the appliance door.

Locking function

The accessories can be pulled out approximately halfway until they lock in place. The locking function prevents the accessories from tilting when they are pulled out. The accessories must be inserted into the cooking compartment correctly for the tilt protection to work properly.

When inserting the wire rack, ensure that the catch tappet **a** is at the rear and is facing downwards. The lettering "microwave" must be at the front and the outer rail must face downwards ⌣.

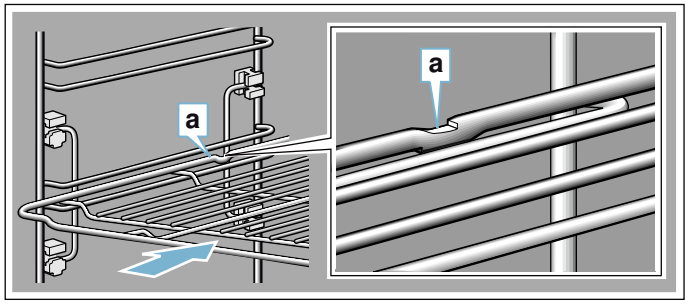

When inserting baking trays, ensure that the catch tappet **a** is at the rear and is facing downwards. The sloping edge of the accessory **b** must be facing forwards towards the appliance door.

Example in the picture: Universal pan

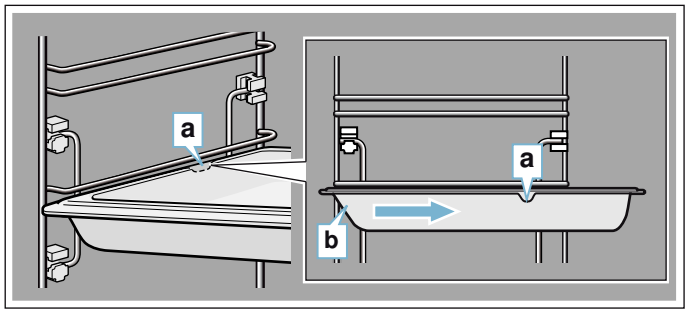

Optional accessories

You can buy optional accessories from the after-sales service, from specialist retailers or online. *You will find a comprehensive range of products for your appliance in our brochures and online.

Both availability and whether it is possible to order online differ between countries. Please see your sales brochures for more details.

When purchasing, please always quote the exact order number of the optional accessory.

Note: Not all optional accessories are suitable for every appliance. When purchasing, please always quote the exact identification number (E-no.) of your appliance.
→ *"Customer service" on page 34*

Special accessories	Order number
Wire rack For ovenware, cake tins and ovenproof dishes, and for roasts and grilled food.	HEZ634080
Universal pan For moist cakes, pastries, frozen meals and large roasts. It can be used to catch dripping fat when you are grilling directly on the wire rack.	HEZ632070
Baking tray For tray bakes and small baked products.	HEZ631070
Wire insert For meat, poultry and fish. For inserting into the universal pan to catch dripping fat and meat juices.	HEZ324000
Universal pan, non-stick For moist cakes, pastries, frozen meals and large roasts. Pastries and roasts can be removed more easily from the universal pan.	HEZ632010
Baking tray, non-stick For tray bakes and small baked products. The pastries can be removed more easily from the baking tray.	HEZ631010
Profi pan For preparing large quantities.	HEZ633070
Lid for the Profi pan The lid turns the Profi pan into a Profi roasting dish.	HEZ633001
Pizza tray For pizzas and large round cakes.	HEZ617000
Grill tray Use for grilling in place of the wire rack or as a splatter guard.Only use in the universal pan.	HEZ625071
Bread-baking stone For home-made bread, bread rolls and pizzas that require a crispy base. The baking stone must be preheated to the recommended temperature.	HEZ327000
Glass roasting dish (5.1 litres) For stews and bakes. Particularly suitable for the "Meals" operating mode.	HEZ915001
Glass tray For large roasts, moist cakes and bakes.	HEZ864000
Glass tray For bakes, vegetable dishes and baked goods.	HEZ636000
Decorative trims For concealing the lower shelf of the unit and the base of the appliance.	HEZ660060

Before using for the first time

Before you can use your new appliance, you must make some settings. You must also clean the cooking compartment and accessories.

Initial use

After connecting the appliance to the power or following a power cut, the settings for initial use are shown on the display. It may take a few seconds for the instruction to appear.

Note: You can change these settings at any time in the basic settings. ⟶ *"Basic settings" on page 21*

With HomeConnect

You can apply the initial settings on the appliance or with Home Connect on your mobile device.

1. Touch the "With Home Connect" text field.
2. Follow the instructions in the "Home Connect" section.⟶ *"Home Connect" on page 23*

On the appliance

Apply the following initial settings on the appliance:

Setting the language

The language is the first setting displayed. "German" is the preset language.

1. Turn the rotary selector to set the required language.
2. Touch the next text field to confirm.
   The next setting appears.

Setting the time

The time starts at "12:00".

1. Touch the "Clock" text field.
2. Set the time using the rotary selector.
3. Touch the "Complete the settings" text field to confirm.

A message appears on the display to confirm that the initial use has been completed.

Cleaning the cooking compartment and accessories

Before using the appliance to prepare food for the first time, you must clean the cooking compartment and accessories.

Cleaning the cooking compartment

To remove the new-appliance smell, heat up the cooking compartment when empty and with the oven door closed.

Ensure that the cooking compartment does not contain any leftover packaging, such as polystyrene pellets. Before heating up the appliance, wipe the smooth surfaces in the cooking compartment with a soft, wet cloth. Keep the kitchen ventilated while the appliance is heating up.

Adjust the settings indicated. You can find out how to set the heating type and the temperature in the next section. ⟶ *"Operating the appliance" on page 15*

Settings	
Heating type	Top/bottom heating
Temperature	240 °C
Cooking time	1 hour

Switch off the appliance after the indicated cooking time using the ⏻ On/Off button.

After the cooking compartment has cooled down, clean the smooth surfaces with soapy water and a dish cloth.

Cleaning the accessories

Clean the accessories thoroughly using soapy water and a dish cloth or soft brush.

Operating the appliance

You have already learnt about the controls and how they work. Now we will explain how to set your appliance. You will learn about what happens when you switch the appliance on and off, and how to select the operating mode.

Switching the appliance on and off

Before you are able to set the appliance, you must switch it on.

Note: The childproof lock and the timer can also be set when the appliance is switched off. Certain displays and notes, such as those relating to the residual heat in the cooking compartment, remain visible on the display after the appliance has been switched off.

Switch off your appliance when you do not need to use it. If no settings are applied for a long time, the appliance switches itself off automatically.

Switching on the appliance

Press the ⏻ On/Off button to switch on the appliance.

The Bosch logo appears on the display, followed by the selection list for the types of heating.

Note: In the basic settings, you can specify which operating mode should appear after the appliance is switched on. ⟶ *"Basic settings" on page 21*

Switching off the appliance

Press the ⏻ On/Off button to switch off the appliance.

Any functions that may be running are cancelled.

The time, or if applicable, the residual heat indicator, appears on the display.

Note: You can set whether or not the time should be displayed when the appliance is switched off in the basic settings. ⟶ *"Basic settings" on page 21*

Starting the operation

You must press the ▷ Start/Stop button to start each operation.

After starting the appliance, the time display is shown on the display along with the settings. The display ring and the heating line also appear.

Pausing the operation

You can also interrupt and then continue an operation using the ▷ Start/Stop button.

If you press and hold the ▷ Start/Stop button for approx. 3 seconds, the operation is cancelled and all settings are reset.

Note: The fan may continue to run after an operation has been paused or cancelled.

Selecting an operating mode

Once the appliance is switched on, the default operating mode is displayed.

If you would like to select a different operating mode, you can do so using the menu. You can find detailed descriptions of the individual operating modes in the corresponding sections.

The following always applies:
1. Touch the appropriate text field.
   The function is highlighted.
2. Turn the rotary selector to change the highlighted selection.
3. If necessary, apply other settings.
   To do this, touch the appropriate text field and change the value using the rotary selector.
4. Press the ▷ Start/Stop button to start.

The appliance starts the operation.

Setting the type of heating and temperature

If the "Types of heating" operating mode has not been selected, touch the "Types of heating" text field in the menu. The selection list for the types of heating appears on the touch-screen displays.

Example in the picture: Hot air eco ⊡ at 195 °C.
1. Touch the text field with the required type of heating. If necessary, scroll though the selection list using the rotary selector.

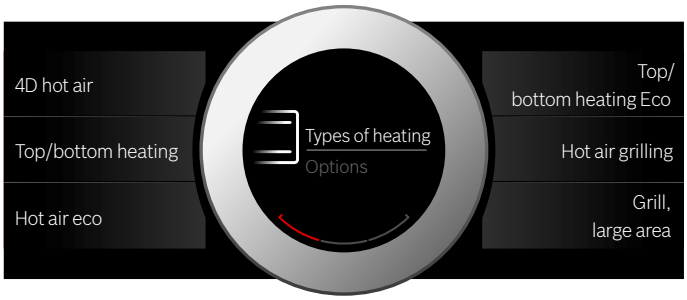

   The temperature is highlighted white.
2. Set the temperature using the rotary selector.

3. Press the ▷ Start/Stop button to start.
   The time on the display shows how long the operation has already been running.

The appliance begins to heat up.

When your dish is ready, switch off the appliance using the ⏻ On/Off button.

Note: You can also set the cooking time and an end time for the operation on the appliance. ⟶ *"Time-setting options" on page 17*

Changing

After starting the appliance, the temperature is highlighted. When you move the rotary selector, the temperature is changed and applied immediately.

To change the type of heating, first use the ▷ Start/Stop button to interrupt the operation and then touch the "Type of heating" text field. The selection list is displayed. Touch the required type of heating. The corresponding default temperature appears on the display.

Note: When you change the type of heating, the other settings are also reset.

Rapid heating

With Rapid heating, you can shorten the heat-up time for some heating types.

Heating types suitable for Rapid heating are:
- 4D hot air
- Top/bottom heating

To ensure an even cooking result, do not place your food in the cooking compartment until Rapid heating is complete.

Applying settings

Ensure you have selected a suitable type of heating and set a temperature of at least 100 °C. Otherwise, rapid heating cannot be activated.

1. Set the type of heating and temperature.
2. Touch the "Rapid heating" text field.

"On" is displayed in the text field. A confirmation message appears on the display.

When rapid heating comes to an end, an audible signal sounds and a message appears on the display. "Off" is displayed in the text field. Place your dish in the cooking compartment.

Note: The "Cooking time" time-setting option starts at the same time as rapid heating. Therefore, only set a cooking time when rapid heating has come to an end.

Cancelling

To cancel the rapid heating, touch the "Rapid heating" text field again. "Off" is displayed in the text field.

Time-setting options

Your appliance has different time-setting options.

Time-setting option		Use
	Cooking time	After the set cooking time has elapsed, the appliance ends the operation automatically.
	End	Enter a cooking time and the required end time. The appliance starts automatically so that the operation ends at the required time.
	Timer	The timer functions like an egg timer. It runs independently of the operation and the other time-setting options. After the set time has elapsed, the appliance does not switch on or off automatically.

You can call up the cooking time and the end time after setting an operation using the touch-screen displays. The timer has a separate field ⌛ and can be adjusted at any time.

An audible signal sounds after a cooking time or timed period has elapsed. You can cancel the audible signal early by touching a field or touch-screen display.

Note: You can change how long the audible signal sounds for in the basic settings. → *"Basic settings" on page 21*

Setting the cooking time

You can set the cooking time for your dish on the appliance. This means that the cooking time is not unintentionally exceeded and you do not need to interrupt other work in order to end the operation.

Applying settings

Depending on which direction you turn the rotary selector first, the cooking time starts at a particular default value: Left = 10 minutes, right = 30 minutes.

The cooking time can be set in one-minute increments up to one hour, and then in five-minute increments.

The maximum setting is 23 hours and 59 minutes.

Example in the picture: It is 10:00, cooking time of 45 minutes.

1. Set the operating mode, and temperature or level.
2. Before starting the operation, touch the "Cooking time" text field.
   The cooking time is highlighted white in the display.
3. Turn the rotary selector to set the cooking time.
   The end time is calculated automatically.

4. Press the ▷ Start/Stop button to start.
   The cooking time counts down.

The appliance begins to heat up.

Once the cooking time has elapsed, an audible signal sounds. The appliance stops heating. The cooking time 00 m 00 s is shown on the display.

You can reset the cooking time using the "Cooking time" text field or you can press the ▷ Start/Stop button to continue the operation without a cooking time.

When your dish is ready, switch the appliance off using the ⏻ On/Off button.

Changing and cancelling

To change the cooking time, touch the "Cooking time" text field. The cooking time is highlighted, and can be changed using the rotary selector. The change is adopted immediately.

If you want to cancel the cooking time, reset the cooking time to zero. After the change has been adopted, operating continues without a cooking time.

Setting the end time

You can delay the time that the cooking time ends. You can, for example, put your dish in the cooking compartment in the morning and set the cooking time so that it is ready at lunch time.

Notes

- Ensure that food is not left in the cooking compartment for too long as it may spoil.
- Do not adjust the end time once the operation has started. The cooking result would no longer be satisfactory.

Applying settings

The end of the cooking time can be delayed by a maximum of 23 hours and 59 minutes.

Example in the picture: It is 10:00, the set cooking time is 45 minutes and the dish should be ready at 12:00.

1. Set the operating mode, and temperature or level.
2. Set the cooking time.

3. Before starting the operation, touch the "End" text field.
   The projected end time is highlighted white in the display.
4. Set a later end time using the rotary selector.

5. Press the ▷ Start/Stop button to start.
   The time at which the appliance will start is shown in the display.

The appliance is in standby mode. When the appliance starts, the cooking time counts down on the display.

Once the cooking time has elapsed, an audible signal sounds. The appliance stops heating. The cooking time 00 m 00 s is shown on the display.

You can reset the cooking time using the "Cooking time" text field or you can press the ▷ Start/Stop button to continue the operation without a cooking time.

When your dish is ready, switch the appliance off using the ⏻ On/Off button.

Changing and cancelling

After starting the appliance, the end time can no longer be changed.

If you want to cancel the cooking time and end time, interrupt the operation by pressing the ▷ Start/Stop button. You can continue the operation without a cooking time or end time.

Setting the timer

The timer runs alongside other settings. You can set it at any time, even if the appliance is switched off. It has its own audible signal so that you can tell whether it is the timer or a cooking time which has elapsed.

Adjusting settings

The timer duration always starts at zero minutes.

The higher the value, the greater the time steps when setting the timer.

The maximum setting is 24 hours.

1. Touch the ⌛ field.
   The symbol lights up red. On the display, the timer duration is shown in white and in focus.
2. Set the timer duration using the rotary selector.
3. Press the ⌛ field to start.
   Note: After a few seconds, the timer also starts automatically.

The timer duration counts down.

The timer remains visible on the display if the appliance is switched off. When an operation is running, the settings for this operation are shown in the foreground. When you touch the ⌛ field, the timer duration is displayed for a few seconds.

When the timer duration comes to an end, an audible signal sounds and a note appears on the display. The symbol is no longer lit up.

Tip: If the set timer duration relates to the appliance operation, use the cooking time. The time is visible in the foreground and the appliance switches off automatically.

Changing and cancelling

To change the timer duration, touch the ⌛ field. The timer duration is displayed in white and in focus, and can be changed by using the rotary selector.

If you want to cancel the timer, reset the timer duration to zero. Once the change has been applied, the symbol is no longer lit up.

Microwave

You can use the microwave to cook, heat up or defrost food quickly. The microwave can be used on its own, or in combination with a type of heating.

To ensure optimum use of the microwave, please observe the notes on cookware and familiarise yourself with the data in the application tables at the end of the instruction manual.

Cookware

Not all cookware is suitable for microwaves. To ensure that your food is heated and the appliance is not damaged, only use cookware that is suitable for microwaves.

Heat-resistant cookware made of glass, glass ceramic, porcelain or heat-resistant plastic is suitable. These materials allow microwaves to pass through. You can also use ceramic if it has been fully glazed and has no cracks.

You can also use serving dishes. This saves you having to transfer food from one dish to another. You should only use cookware with decorative gold or silver trim if the manufacturer guarantees that they are suitable for use in microwaves.

To bake in combined operation, you can use ordinary metal baking tins. This means that the cake is also browned from below.
Metal dishes are not suitable for other applications. Metal does not allow microwaves to pass through. Food in covered metal containers will remain cold.

Caution!

Creation of sparks: Metal (e.g. a spoon in a glass) must be kept at least 2 cm from the cooking compartment walls and the inside of the door. Sparks may irreparably damage the glass on the inside of the door.

Cookware test

Never switch on the microwave unless there is food inside. The short cookware test is the only exception to this rule.

Perform the following test if you are unsure whether your cookware is suitable for use in the microwave.

1. Heat the empty cookware at maximum power for ½ to 1 minute.
2. Check the temperature of the cookware during this time.

The cookware should remain cold or warm to the touch.

The cookware is unsuitable if it becomes hot or sparks are generated.
In this case, stop the test.

⚠ Warning – Risk of burns!
The accessible parts become very hot when in operation. Never touch hot parts. Keep children at a safe distance.

Accessories included

Only the wire rack provided is suitable when using the microwave only. If you use the universal pan or the baking tray, this may create sparks, which may damage the cooking compartment.

When using the appliance in combination with the microwave or "Dishes" mode, you can use the universal pan, baking tray or any other accessories that have been included with the appliance.

When using the microwave, it is best to insert accessories at level 1, unless otherwise specified.

Microwave power settings

A variety of microwave power settings that are suitable for different types of food and food preparation are available.

In order to operate the microwave, a cooking time must always be provided. You can either apply the default cooking time or adjust it in the display.

Power setting	Use	Maximum cooking time
90 W	For defrosting delicate foods	1 hr 30 mins
180 W	For defrosting and continued cooking	1 hr 30 mins
360 W	For cooking meat and for heating delicate foods	1 hr 30 mins
600 W	For heating and cooking food	1 hr 30 mins
1000 W	For heating liquids	30 mins

Setting the microwave

Before setting the microwave, observe the information regarding suitable ovenware.

1. Touch the **Menu** field.
   The list of operating modes is displayed.
2. Touch the "Microwave" text field.
3. Touch the text field for the required microwave power setting.
   The cooking time is highlighted in white in the display.
4. Turn the rotary selector to set the cooking time.
5. Press the ▷ Start/Stop button to start.
   The cooking time counts down in the display. The heating line does not appear when using the microwave operating mode.

The appliance starts.

Once the cooking time has elapsed, an audible signal sounds. The appliance finishes the operation. The cooking time 00 m 00 s is shown in the display.

When your dish is ready, use the ⏻ On/Off button to switch off the appliance.

Changing and cancelling

After starting the appliance, the cooking time remains highlighted. When you move the rotary selector, the cooking time is changed and applied immediately.

Use the ▷ Start/Stop button to pause the operation in order to change the microwave power setting. Touch the text field for the required power setting and use the ▷ Start/Stop button to resume the operation. The cooking time is maintained.

If you want to cancel the microwave operating mode, use the ▷ Start/Stop button to pause the operation and select another operating mode.

Setting MicroCombi

With some types of heating, it is possible to switch on the microwave.

Suitable types of heating include:
- 4D hot air
- Top/bottom heating
- Hot air grilling
- Grill, large area
- Grill, small area

The 90-watt, 180-watt and 360-watt microwave power settings can be used with MicroCombi.

Before setting MicroCombi, observe the information regarding suitable ovenware.

1. Touch the **Menu** field.
   The list of operating modes is displayed.
2. Touch the "MicroCombi" text field.
3. Touch the text field for the required type of heating.
4. Touch the text field for the required microwave power setting.
   The temperature or level is highlighted in white in the display.
5. Turn the rotary selector to set the temperature or level.
6. Touch the "Cooking time" text field.
   The cooking time is highlighted in white in the display.
7. Turn the rotary selector to set the cooking time.
8. Press the ▷ Start/Stop button to start.
   The cooking time counts down in the display.

The appliance starts.

Once the cooking time has elapsed, an audible signal sounds. The appliance finishes the operation. The cooking time 00 m 00 s is shown in the display.

When your dish is ready, use the ⏻ On/Off button to switch off the appliance.

Changing and cancelling

After starting the appliance, the temperature remains highlighted. When you move the rotary selector, the temperature and/or level is changed and applied immediately.

Change the cooking time by touching the "Cooking time" text field and turning the rotary selector. The change is applied immediately.

To change the type of heating or the microwave power setting, use the ▷ Start/Stop button beforehand to pause the operation. Touch the text field for the type of heating or the microwave power setting, and make the adjustment.

Note: When you change the type of heating or microwave power setting, the other settings are also reset.

If you want to cancel the MicroCombi operating mode, use the ▷ Start/Stop button to pause the operation and select another operating mode.

Drying

Dry the cooking compartment after operation to ensure that no moisture remains.

Starting drying

During drying, the cooking compartment is heated up so that the moisture in the cooking compartment evaporates. Then open the appliance door so that the steam escapes.

Caution!
Enamel damage: Do not start any operations when there is water on the cooking compartment floor. Before operation, wipe away the water from the cooking compartment floor.

1. Leave the appliance to cool down.
2. Remove the worst dirt from the cooking compartment immediately and wipe away moisture from the cooking compartment floor.
3. If necessary, press the ⏻ On/Off button to switch on the appliance.
4. Touch the **Menu** field.
   The options for selecting an operating mode are displayed.
5. Touch the "Cleaning" text field.
6. Touch the "Drying" text field.
   The duration is displayed. It cannot be changed.
7. Press the ▷ Start/Stop button to start.
   The drying function starts and ends automatically after 10 minutes.
8. Open the appliance door and leave it open for 1 to 2 minutes so that the moisture in the cooking compartment can escape.

Drying the cooking compartment by hand

1. Leave the appliance to cool down.
2. Remove any dirt from the cooking compartment.
3. Dry the cooking compartment with a soft cloth.
4. Leave the appliance door open for one hour so that the cooking compartment dries completely.

Childproof lock

Your appliance is equipped with a childproof lock so that children cannot switch it on accidentally or change any settings.

The control panel is locked and no settings can be made. The appliance can only be switched off using the ⏻ On/Off button.

Activating and deactivating

You can activate and deactivate the childproof lock when the appliance is switched on or off.

In each case, press the ⊶ field for approx. 4 seconds.

A confirmation note appears on the display.

The ⊶ field lights up red when the appliance is switched on. The ⊶ field does not light up when the appliance is switched off.

Basic settings

There are various settings available to you in order to help use your appliance effectively and simply. You can change these settings as required.

Changing the basic settings

The appliance must be switched on.

1. Touch the **menu** field.
   The options for selecting an operating mode are displayed.
2. Touch the "Basic settings" text field.
   The settings appear on the touch-screen displays.
3. Touch the text field with the required setting.
   The red bar next to the text field identifies the setting that is currently selected.
   Its corresponding value is shown on the display.
4. Turn the rotary selector to change the value as required.
5. Touch the text field for the next setting.
   Its value is shown on the display and can be changed using the rotary selector.
6. Work through the settings and use the rotary selector to make changes as required.
   To scroll through the settings, touch the "Further settings" text field.
7. Touch the **Menu** field to confirm.
   A query is displayed asking whether the changes should be saved.
8. Touch the "Save" text field.

A message is shown on the display to confirm that the settings have been saved.

Cancelling

If you do not want to save the settings, touch the **Menu** field and then touch the "Do not save" text field. A message is shown on the display to confirm that the settings have not been saved. Switch off the appliance using the ⏻ On/Off button if you do not need to use it.

List of basic settings

Depending on the features of your appliance, not all basic settings are accessible.

Setting	Options
Language	Additional languages are possible.
Clock	Clock in 24-hour format
Home Connect	Switching WiFi on and off ⟶ *"Home Connect" on page 23*
Factory settings	Restore Do not restore*
Audible signal	Short cooking time (30 sec.) Medium cooking time (1 min.)* Long cooking time (5 min.)
Volume	Scale with 5 levels

Button tone	Switched on Switched off* (tone remains for ⏻ On/Off)
Display brightness	5 levels
Clock display	Off Digital* Analogue
Lighting	Off during operation On during operation*
Automatic continue	Do not continue automatically* When closing the door (Only applicable for the Microwave operating mode)
Childproof lock	Button lock only* Door lock and button lock
Operation after switching on	Main menu Types of heating* Microwave MicroCombi Assist
Night-time darkening	Switched off* Switched on
Brand logo	Display* Do not display
Fan run-on time	Recommended* Minimum
Sabbath mode	Switched on Switched off*

* Factory setting (factory settings may vary depending on the appliance model)

Note: Changes to the language, button tone and display brightness settings take effect immediately. All other changes take effect after the settings have been changed.

Power cut

The changes you make to the settings are saved even after a power cut.

You only have to reset the settings for the initial use following a long-term power cut. The appliance can bridge a short-term power cut.

Changing the time

If you want to change the time, for example from summer to winter time, you must change the basic setting.

The appliance must be switched on.

1. Touch the **Menu** field.
   The options for selecting an operating mode are displayed.
2. Touch the "Basic settings" text field.
   The settings appear on the touch-screen displays.
3. Touch the "Clock" text field.
   The time appears on the display.
4. Turn the rotary selector to change the time.
5. Touch the **Menu** field to confirm.
   A query is displayed asking whether the changes should be saved.
6. Touch the "Save" text field.

A message is shown on the display to confirm that the settings have been saved.

Sabbath mode

With the Sabbath mode, a cooking time of up to 74 hours can be set. You can keep the food in the cooking compartment warm without having to switch the oven on or off.

Starting Sabbath mode

Before you are able to use the Sabbath mode, you must activate it in the basic settings. ⟶ *"Basic settings" on page 21*

When the basic setting has been changed accordingly, Sabbath mode is listed with the types of heating as the last type of heating.

The appliance heats up with top/bottom heating. You can set a temperature between 85 °C and 140 °C.

The "Types of heating" operating mode must be selected. The selection list for the types of heating appears on the touch-screen displays.

1. Touch the "Sabbath mode" text field.
   The default temperature is highlighted white in the display.
2. Set the required temperature using the rotary selector.
3. Before starting the operation, touch the "Cooking time" text field.
   The default cooking time is highlighted white in the display.
4. Set the required cooking time using the rotary selector.
   Note: The end time is calculated automatically but cannot be changed.
5. Press the ▷ Start/Stop button to start.
   The cooking time counts down on the display.

The appliance begins to heat up.

When the cooking time for Sabbath mode has ended, an audible signal sounds. The appliance stops heating. The cooking time 00 m 00 s is shown on the display.

Press the ⏻ On/Off button to switch off the appliance.

Note: The operation is not interrupted if you open the appliance door.

Changing and cancelling

After starting the appliance, the settings can no longer be changed.

If you would like to cancel Sabbath mode, switch the appliance off using the ⏻ On/Off button. You can no longer pause the operation using the ▷ Start/Stop button.

Home Connect

This appliance is WiFi-capable and can be remotely controlled using a mobile device.

If the appliance is not connected to the home network, the appliance functions in the same way as an oven with no network connection and can still be operated via the display.

Notes

- Ensure that you follow the safety instructions in this instruction manual and that these are complied with even when operating the appliance via the Home Connect app and when you are away from home. Follow the instructions in the Home Connect app.⟶ *"Important safety information" on page 5*
- Operation on the appliance always has priority. During this time, it is not possible to operate the appliance using the Home Connect app.

Setting up

To implement settings via Home Connect, you must have installed the Home Connect app on your mobile device.

Observe the supplied Home Connect documents for this.

Follow the steps specified by the app to implement the settings.

Automatic registration in the home network

Notes

- You require a router that has WPS functions.
- You can start the Home Connect Assistant during initial start-up or using the main menu.

1. Touch the **Menu** field.
2. Touch the "Home Connect Assistant" text field.
   The appliance is ready to connect to the network automatically.

3. Press the WPS button on the router.
   Wait until "Network connection successful" is shown in the display.

4. Touch "Connect to the app".

   The appliance is ready to connect to the app.
5. Start the app on the mobile device and follow the instructions for automatic network registration.

The process for registering is completed once "Successfully connected to the app" is shown in the display.

Manual registration in the home network

Note: You can start the Home Connect Assistant during initial start-up or using the menu.

1. Touch the **Menu** field.
2. Touch the "Home Connect Assistant" text field.
3. Touch the "Connect manually" text field.

The appliance is ready to connect to the network manually.
The SSID and the key for the oven network are shown in the display.

4. Use the SSID "HomeConnect" and the key "HomeConnect" to register the mobile device on the oven network.

   Wait until "Network connection successful" is shown in the display.

5. Touch "Connect to the app".

   The appliance is ready to connect to the app.

6. Start the app on the mobile device and follow the instructions for manual network registration.

The process for registering is completed once "Successfully connected to the app" is shown in the display.

Remote Start

If you want to start an oven operation using your mobile device, you must activate remote start.

Notes

- The "Remote start" text field is only visible if the Home Connect Assistant has been successfully completed.
- Note that some operating modes can only be started on the oven itself.

1. Touch the **Menu** field.
2. Touch the "Remote Start" text field.

appears in the display

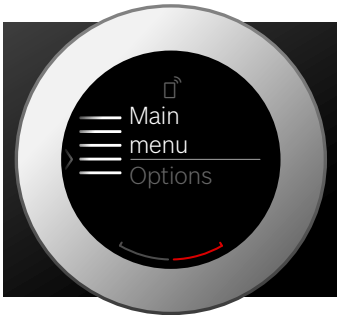

Remote start is automatically deactivated in the following situations:

- The oven door is opened 15 minutes after remote start is activated.
- The oven door is opened 15 minutes after the oven operation ends.
- 24 hours after remote start is activated.

When you start the oven operation on the appliance, remote start is automatically activated. You can therefore make changes on your mobile device or start a new programme.

Home Connect settings

You can adjust Home Connect to suit your requirements at any time.

Note: In the Home Connect settings, press the ℹ field to display network and device information.

WiFi

If WiFi is activated, you can use the Home Connect functions.

Note: In the networked standby mode, your appliance requires a maximum of 3 W.

1. Touch the **Menu** field.
2. Touch the "Basic settings" text field.
3. Touch the "Home Connect" text field.
4. Touch the "WiFi" text field to switch the wireless module on or off.

Disconnect from the network

You can disconnect your oven from the network at any time.

Note: If your oven is disconnected from the network, it is not possible to operate the oven using Home Connect.

1. Touch the **Menu** field.
2. Touch the "Basic settings" text field.
3. Touch the "Home Connect" text field.
4. Touch the "Disconnect from network" text field.

Connect to the network

1. Touch the **Menu** field.
2. Touch the "Basic settings" text field.
3. Touch the "Home Connect" text field.
4. Touch the "Connect to network" text field.
5. Touch the
   "Connect manually" or
   "Connect automatically" text field.
6. Follow the notes in the section
   "Manual registration in the home network" or
   "Automatic registration in the home network".

Connect to the app

If the Home Connect app is installed on your mobile device. you can connect it to your oven.

Note: The appliance must be connected to the network.

1. Touch the **Menu** field.
2. Touch the "Basic settings" text field.
3. Touch the "Home Connect" text field.
4. Touch the "Connect to the app" text field.

Remote control

You can use the Home Connect app to easily access the functions of your oven.

Notes

- Operation on the appliance always has priority. During this time, it is not possible to operate the appliance using the Home Connect app.
- The remote control is activated when the appliance is first delivered.
- If the remote control has been deactivated, only the oven's operating statuses are displayed in the Home Connect app.
- The remote control is automatically activated when the remote start is activated.

1. Touch the **Menu** field.
2. Touch the "Basic settings" text field.
3. Touch the "Home Connect" text field.
4. Touch the "Remote control" text field to switch operation via the Home Connect app on or off.

About data protection

When your appliance is connected for the first time to a WLAN network, which is connected to the Internet, your appliance transmits the following categories of data to the Home Connect server (initial registration):

- Unique appliance identification (consisting of appliance codes as well as the MAC address of the installed WiFi communication module).
- Security certificate of the WiFi communication module (to ensure a secure IT connection).
- The current software and hardware version of your domestic appliance.
- Status of any previous resetting to factory settings.

This initial registration prepares the Home Connect functions for use and is only required when you want to use these Home Connect functions for the first time.

Note: Ensure that the Home Connect functions can be used only in conjunction with the Home Connect app. Information on data protection can be accessed in the Home Connect app.

Declaration of Conformity

Robert Bosch Hausgeräte GmbH hereby declares that the appliance which features Home Connect is in accordance with the basic requirements and the other relevant provisions of the directive 1999/5/EC.

A detailed R&TTE Declaration of Conformity can be found online at www.bosch-home.com/de on the product page for appliance in the additional documents.

CE

Cleaning agent

With good care and cleaning, your appliance will retain its appearance and remain fully functioning for a long time to come. We will explain here how you should correctly care for and clean your appliance.

Suitable cleaning agents

To ensure that the different surfaces are not damaged by using the wrong cleaning agent, observe the information in the table. Depending on the appliance model, not all of the areas listed may be on/in your appliance.

Caution!
Risk of surface damage
Do not use:
- Harsh or abrasive cleaning agents,
- Cleaning agents with a high alcohol content,
- Hard scouring pads or cleaning sponges,
- High-pressure cleaners or steam cleaners,
- Special cleaners for cleaning the appliance while it is hot.

Wash new sponge cloths thoroughly before use.

Tip: Highly recommended cleaning and care products can be purchased through the after-sales service. Observe the respective manufacturer's instructions.

Warning – Risk of burns!
The appliance becomes very hot. Never touch the interior surfaces of the cooking compartment or the heating elements. Always allow the appliance to cool down. Keep children at a safe distance.

Area	Cleaning
Appliance exterior	
Stainless steel front	Hot soapy water: Clean with a dish cloth and then dry with a soft cloth. Remove flecks of limescale, grease, starch and albumin (e.g. egg white) immediately. Corrosion can form under such flecks. Special stainless steel cleaning products suitable for hot surfaces are available from our after-sales service or from specialist retailers. Apply a very thin layer of the cleaning product with a soft cloth.
Plastic	Hot soapy water: Clean with a dish cloth and then dry with a soft cloth. Do not use glass cleaner or a glass scraper.
Painted surfaces	Hot soapy water: Clean with a dish cloth and then dry with a soft cloth.
Control panel	Hot soapy water: Clean with a dish cloth and then dry with a soft cloth. Do not use glass cleaner or a glass scraper.
Door panels	Hot soapy water: Clean with a dish cloth and then dry with a soft cloth. Do not use a glass scraper or a stainless steel scouring pad.
Door handle	Hot soapy water: Clean with a dish cloth and then dry with a soft cloth. If descaler comes into contact with the door handle, wipe it off immediately. Otherwise, any stains will not be able to be removed.
Appliance interior	
Enamel surfaces and self-cleaning surfaces	Observe the instructions for the surfaces of the cooking compartment that follow the table.
Glass cover for the interior lighting	Hot soapy water: Clean with a dish cloth and then dry with a soft cloth. If the cooking compartment is heavily soiled, use oven cleaner.
Door seal Do not remove.	Hot soapy water: Clean with a dish cloth. Do not scour.
Stainless steel door cover	Stainless steel cleaner: Observe the manufacturer's instructions. Do not use stainless steel care products. Remove the door cover for cleaning.
Stainless steel interior door frame	Stainless steel cleaner: Observe the manufacturer's instructions. This can be used to remove discolouration. Do not use stainless steel care products.
Rails	Hot soapy water: Soak and clean with a dish cloth or brush.
Pull-out system	Hot soapy water: Clean with a dish cloth or a brush. Do not remove the lubricant while the pull-out rails are pulled out – it is best to clean them when they are pushed in. Do not clean in the dishwasher.
Accessories	Hot soapy water: Soak and clean with a dish cloth or brush. If there are heavy deposits of dirt, use a stainless steel scouring pad.

Notes
- Slight differences in colour on the front of the appliance are caused by the use of different materials, such as glass, plastic and metal.
- Shadows on the door panels, which look like streaks, are caused by reflections made by the interior lighting.
- Enamel is baked on at very high temperatures.This can cause some slight colour variation. This is normal and does not affect operation.
  The edges of thin trays cannot be completely enamelled. As a result, these edges can be rough. This does not impair the anti-corrosion protection.

Surfaces in the cooking compartment

The back wall, ceiling and side parts in the cooking compartment are self-cleaning. You can tell this from the rough surface.

The cooking compartment floor is enamelled and has smooth surfaces.

Cleaning enamelled surfaces

Clean the smooth enamelled surfaces with a dish cloth and hot soapy water or a vinegar solution. Then dry with a soft cloth.

Soften baked-on food residues with a damp cloth and soapy water. Use stainless steel wire wool or oven cleaner to remove stubborn dirt.

Leave the cooking compartment open to dry after cleaning.

Note: Food residues can cause white deposits to form. These are harmless and do not affect how the appliance works. You can remove these residues using lemon juice if required.

Cleaning self-cleaning surfaces

The self-cleaning surfaces are coated with a porous, matte ceramic layer. This coating absorbs and dispels splashes from baking and roasting while the appliance is in operation.

If the self-cleaning surfaces no longer clean themselves sufficiently and dark stains appear, they can be cleaned using the cleaning function. To do this, refer to the information in the relevant section. ⟶ *"Cleaning function" on page 28*

Caution!
Do not use oven cleaner on self-cleaning surfaces. This will damage the surfaces. If oven cleaner does get onto these surfaces, dab it off immediately using water and a sponge cloth. Do not rub the surface and do not use abrasive cleaning aids.

Keeping the appliance clean

Always keep the appliance clean and remove dirt immediately so that stubborn deposits of dirt do not build up.

Tips

- Clean the cooking compartment after each use. This will ensure that dirt cannot be baked on.
- Always remove flecks of limescale, grease, starch and albumin (e.g. egg white) immediately.
- Use the universal pan for baking very moist cakes.
- Use suitable ovenware for roasting, e.g. a roasting dish.

Cleaning function

The self-cleaning surfaces in the cooking compartment are cleaned with the “EcoClean Direct” cleaning function.

EcoClean Direct

The self-cleaning surfaces in the cooking compartment are cleaned with the “EcoClean Direct” cleaning function.

The self-cleaning surfaces (back panel, ceiling panel and side panels) are coated with a porous, matt ceramic material. This coating absorbs and breaks down splashes from baking, roasting and grilling while the oven is in operation. If the surfaces no longer clean themselves adequately and dark patches appear, the surfaces can be cleaned by the cleaning function.

Note: The appliance records the number of times it is used.The appliance indicates when it has reached a point in time after which cleaning is recommended. The recommendation is displayed until the cleaning function has finished.
If you do not act on this recommendation, the self-cleaning surfaces may become damaged.
If your appliance is already prematurely very dirty or if you notice dark patches on the back panel, do not wait until your appliance recommends cleaning to do so. This is because the more often the appliance is cleaned, the longer the self-cleaning surfaces will retain their cleaning capability. You can clean your appliance at any time as required using the cleaning function.

Prior to initiating the cleaning function

Remove shelves, rails, accessories and ovenware from the cooking compartment.

Cleaning the cooking compartment floor and the inside of the appliance door

Remove the worst dirt from the cooking compartment floor, the inside of the appliance door and the interior lighting. Otherwise, patches will appear that can no longer be removed.

Caution!
Do not use oven cleaner on the self-cleaning surfaces. This will damage the surfaces. If oven cleaner does come into contact with these surfaces, dab it off immediately with water and a sponge cloth. Please to not rub or use any abrasive cleaning materials.

Setting the cleaning function

Before setting the cleaning function, ensure that you have followed all instructions for preparation.

The duration for the cleaning function is preset to 1 hour. It cannot be changed.

1. Touch the **Menu** field.
   The list of operating modes are displayed.
2. Touch the "Cleaning" text field.
3. Touch the "EcoClean direct" text field.
4. Press the ▷ Start/Stop button to start.
   The time counts down on the display. The heating line does not appear for the cleaning function.

The cleaning function starts.

Ventilate the kitchen when the cleaning function is running.

When the cleaning function has ended, an audible signal sounds. The duration 00 m 00 s is shown on the display. Press the ⏻ On/Off button to switch off the appliance.

Setting a later end time

You can set a later end time. Before starting the appliance, touch the "End" text field and set a later end time using the rotary selector.

The appliance switches to standby after it is started. The end time can no longer be changed.

Cancel

If you would like to cancel the cleaning function, switch the appliance off using the ⏻ On/Off button. You can no longer pause the operation using the ▷ Start/Stop button.

Note: The operating hour counter is not reset. The instruction for the cleaning function is still shown on the display.

Once the cleaning function has ended

Once the cooking compartment has cooled down, wipe down the cooking compartment with a damp cloth if necessary.

Note: During operation and while the cleaning function is active, reddish patches may form on the surfaces. This is not rust, but food residues. These patches are not hazardous to your health and do not limit the cleaning capacity of the self-cleaning surfaces.

Drying

Dry the cooking compartment after operation to ensure that no moisture remains.

Starting drying

During drying, the cooking compartment is heated up so that the moisture in the cooking compartment evaporates. Then open the appliance door so that the steam escapes.

Caution!
Enamel damage: Do not start any operations when there is water on the cooking compartment floor. Before operation, wipe away the water from the cooking compartment floor.

1. Leave the appliance to cool down.
2. Remove the worst dirt from the cooking compartment immediately and wipe away moisture from the cooking compartment floor.
3. If necessary, press the ⏻ On/Off button to switch on the appliance.
4. Touch the **Menu** field.
   The options for selecting an operating mode are displayed.
5. Touch the "Cleaning" text field.
6. Touch the "Drying" text field.
   The duration is displayed. It cannot be changed.
7. Press the ▷ Start/Stop button to start.
   The drying function starts and ends automatically after 10 minutes.
8. Open the appliance door and leave it open for 1 to 2 minutes so that the moisture in the cooking compartment can escape.

Drying the cooking compartment by hand

1. Leave the appliance to cool down.
2. Remove any dirt from the cooking compartment.
3. Dry the cooking compartment with a soft cloth.
4. Leave the appliance door open for one hour so that the cooking compartment dries completely.

Rails

With good care and cleaning, your appliance will retain its appearance and remain fully functional for a long time to come. This will tell you how to remove the shelves and clean them.

Detaching and refitting the rails

Warning – Risk of burns!
The rails become very hot. Never touch the hot rails. Always allow the appliance to cool down. Keep children away from the appliance.

Detaching the rails

1. Push the rail to the front and up (fig. 1)
2. and detach it (fig. 2).

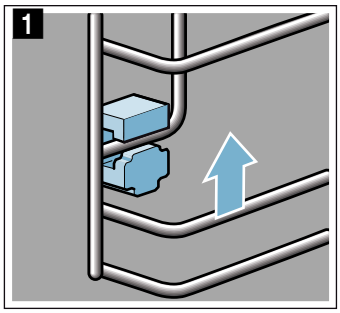

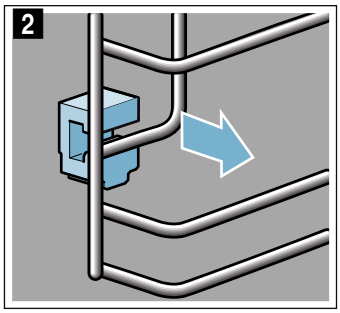

3. Then swing the entire rail outwards **a** and detach it at the rear **b** (fig. 3).

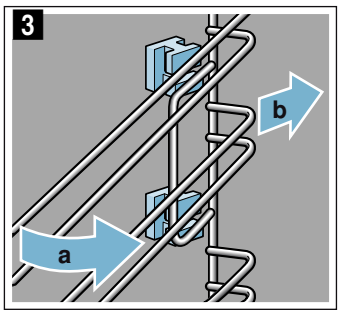

Clean the rails with cleaning agent and a sponge. For stubborn deposits of dirt, use a brush.

Inserting the holders

If the holders fall out when you remove the rails, these must be re-inserted.

1. The holders at the front differ from those at the rear (fig. 1).
2. Use the hook to mount the front holder at the top into the round hole **a**, set it at a slight incline, attach it at the bottom, and straighten it **b** (fig. 2).

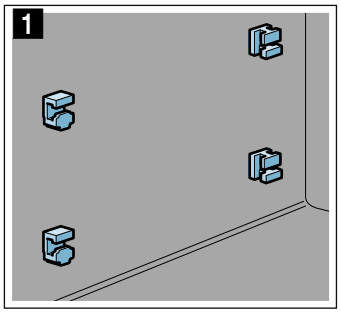

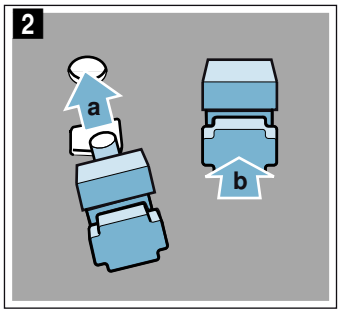

3. Use the hook to attach the rear holder into the upper hole **a** and push it into the lower hole **b** (fig. 3).

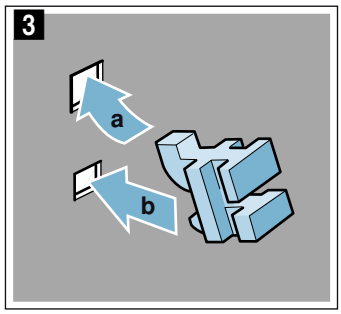

Attaching the rails

When hanging the rails, ensure that the sloping edge is at the top of the rail.

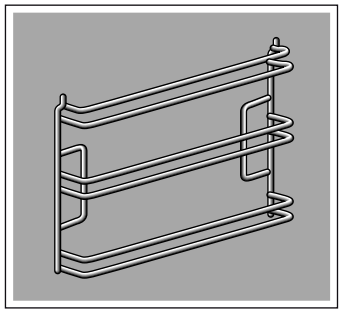

The rails fit both the left and right sides.

1. Hold the rear of the frame at an angle, and mount it at the top and bottom **a** (fig. 1).
2. Pull the rail forwards (fig. 2).

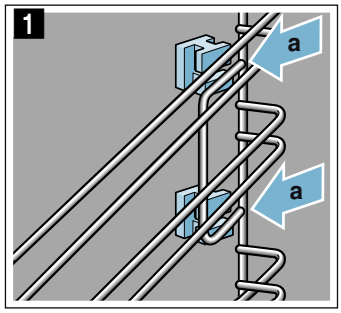

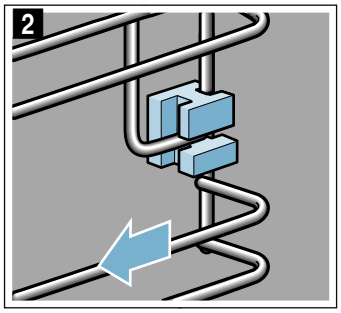

3. Then fold it forwards and insert it (fig. 3)
4. and push it downwards (fig. 4).

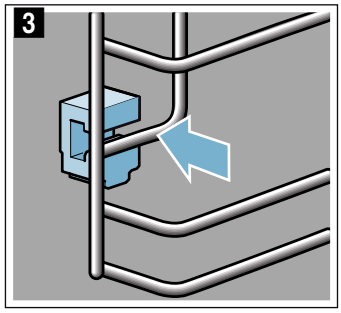

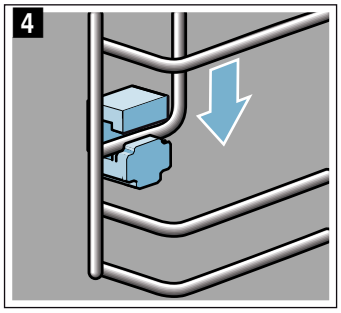

Appliance door

With good care and cleaning, your appliance will retain its appearance and remain fully functional for a long time to come. This will tell you how to clean the appliance door.

Removing the door cover

The stainless-steel inlay in the door cover may become discoloured. To carry out thorough cleaning, you can remove the cover.

1. Open the appliance door slightly.
2. Press on the right and left side of the cover (fig. 1).
3. Remove the cover (fig. 2).
   Close the appliance door carefully

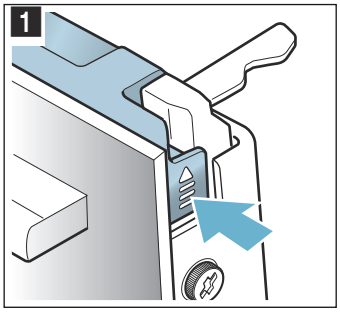
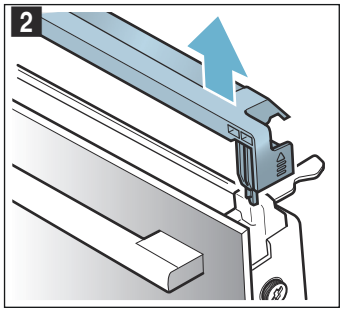

   Note: Clean the stainless-steel inlay in the cover with a stainless-steel cleaning agent. Clean the rest of the door cover with soapy water and a soft cloth.
4. Open the appliance door again slightly. Put the cover back in place and press on it until it clicks audibly into place (fig. 3).

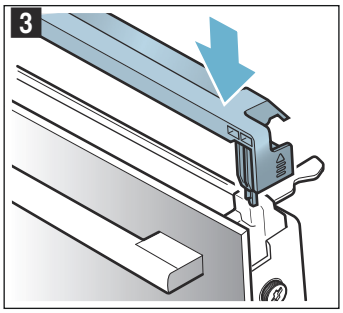

5. Close the appliance door.

Removing and fitting the door panels

To facilitate cleaning, you can remove the glass panels from the appliance door.

Removing the door panels from the appliance

1. Open the appliance door slightly.
2. Press on the right and left side of the cover (fig. 1).
3. Remove the cover (fig. 2).

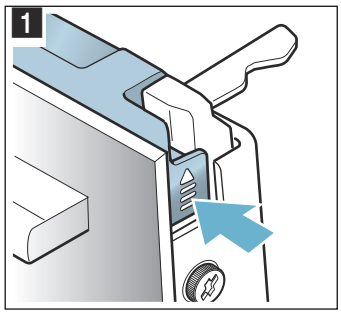
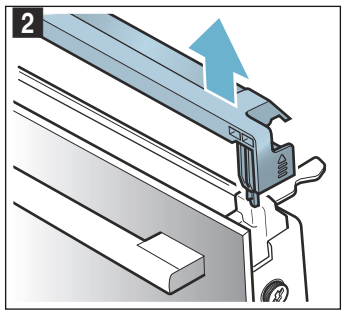

4. Undo and remove the screws on the left and right of the appliance door (fig. 3).
5. Before closing the door again, trap a tea towel that has been folded several times in the door (fig. 4). Pull out the front panel upwards and lay it on a flat surface with the door handle facing downwards.

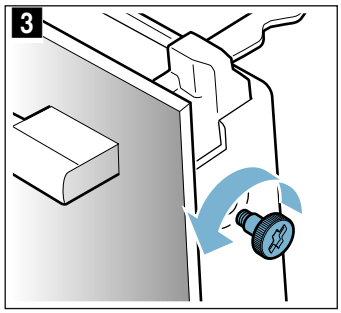
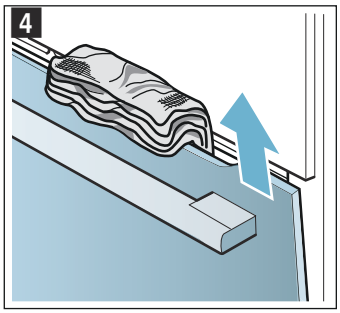

6. Push both retainers at the top of the intermediate panel upwards, but do not remove them (fig. 5). Hold the panel with one hand. Take out the panel.

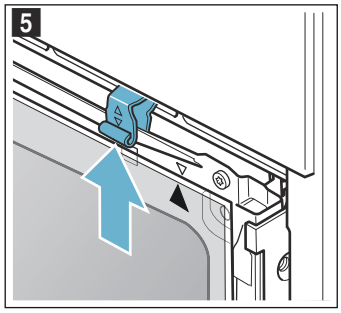

Clean the panels with glass cleaner and a soft cloth.

⚠ Warning – Risk of serious damage to health!
If the screws are loosened, the safety of the appliance can no longer be guaranteed. Microwave energy may escape. Never loosen the screws.

Do not unscrew the four black screws (fig. 6).

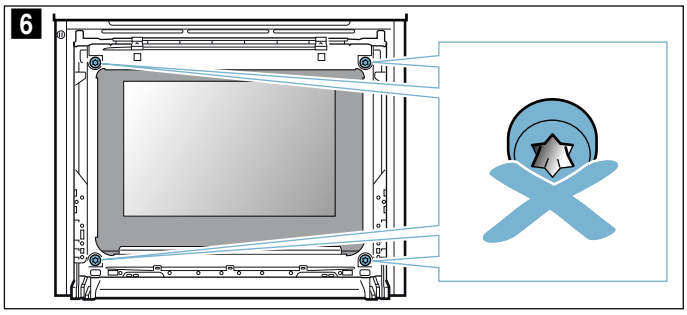

Warning – Risk of injury!

- Scratched glass in the appliance door may develop into a crack. Do not use a glass scraper, sharp or abrasive cleaning aids or detergents.
- The hinges on the appliance door move when opening and closing the door, and you may be trapped. Keep your hands away from the hinges.

Fitting the door panels on the appliance

When fitting the intermediate panel, make sure that the arrow is in the top right of the panel and that it aligns with the arrow on the metal panel.

1. Insert the intermediate panel into the retainer at the bottom and push it in firmly from the top (fig. 1).
2. Push both retainers downwards (fig. 2).

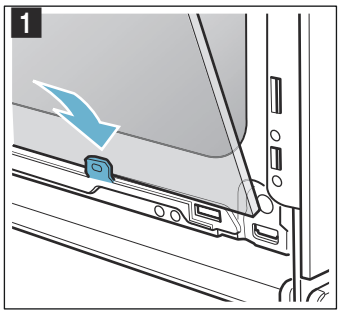

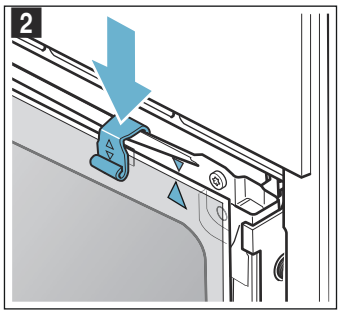

3. Insert the front panel downwards into the retainers (fig. 3).
4. Close the front panel until both upper hooks are opposite the opening (fig. 4).

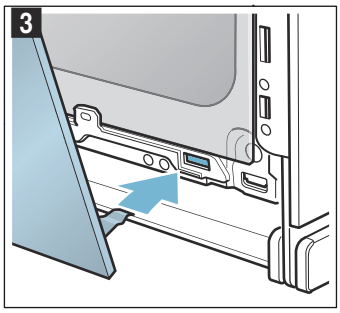

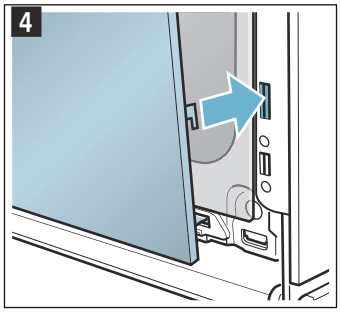

5. Press the front panel down until it clicks audibly into place (fig. 5).
6. Open the appliance door again slightly and remove the tea towel.
7. Screw both screws back in on the left and right.
8. Put the cover back in place and press on it until it clicks audibly into place (fig. 6).

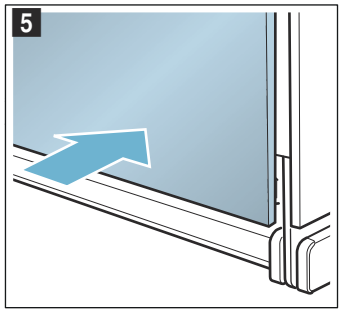

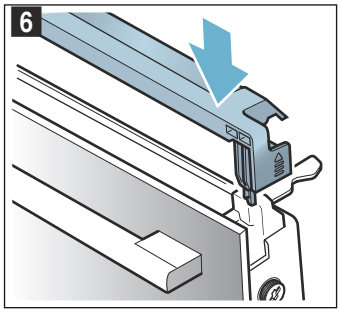

9. Close the appliance door.

Caution!

Do not use the cooking compartment again until the panels have been correctly fitted.

Trouble shooting

If a fault occurs, there is often a simple explanation. Before calling the after-sales service, please refer to the fault table and attempt to correct the fault yourself.

Rectifying faults yourself

You can often easily rectify technical faults on the appliance yourself.

If a dish does not turn out exactly as you wanted, you can find many tips and instructions for preparation at the end of the operating manual. → *"Tested for you in our cooking studio" on page 36*

Fault	Possible cause	Notes/remedy
The appliance does not work.	Faulty fuse.	Check the circuit breaker in the fuse box.
	Power cut	Check whether the kitchen light or other kitchen appliances are working.
"Sprache Deutsch" appears on the display.	Power cut	Reset the language and the time.
The time does not appear when the appliance is switched off.	Basic setting is changed.	Change the basic setting for the clock display.
The appliance does not heat up; the ⊘ symbol lights up on the display.	Demo mode is activated in the basic settings.	Briefly disconnect the appliance from the mains (switch off the circuit breaker in the fuse box) and then deactivate demo mode in the basic settings within 3 minutes.
The rotary selector has fallen out of the support in the control panel.	The rotary selector has been accidentally disengaged.	The rotary selector can be removed. Simply place the rotary selector back in its support in the control panel and push it in so that it engages and can be turned as usual.
The rotary selector can no longer be turned easily.	There is dirt under the rotary selector.	The rotary selector can be removed. To disengage the rotary selector, simply remove it from the support. Alternatively, press on the outer edge of the rotary selector so that it tips and can be picked up easily. Carefully clean the rotary selector and its support on the appliance using a cloth and soapy water. Dry with a soft cloth. Do not use any sharp or abrasive materials. Do not soak or clean in the dishwasher. Do not remove the rotary selector too often so that the support remains stable.
Home Connect does not work correctly.		Go to www.home-connect.com

⚠ Warning – Risk of electric shock!
Incorrect repairs are dangerous. Repairs may only be carried out and damaged power cables replaced by one of our trained after-sales technicians. If the appliance is defective, unplug the appliance from the mains or switch off the circuit breaker in the fuse box. Contact the after-sales service.

Error messages on the display

When an error message appears on the display with "D" or "E", e.g. D0111 or E0111, switch the appliance off and on again using the ⏻ On/Off button.

If it was a one-off error, the display goes out. If the error message appears again, call the after-sales service and quote the exact error message.

Maximum operating time

If you do not change the settings on your appliance for several hours, the appliance stops heating up automatically. This prevents unwanted continuous operation.

The respective settings for the operating mode govern when the maximum operating time is reached.

Maximum operating time reached
A note appears on the display confirming that the maximum operating time has been reached.

To continue operation, touch any field or turn the rotary selector.

Switch the appliance off using the ⏻ On/Off button if you do not need to use it.

Tip: Set a cooking time so that the appliance does not switch off when you do not want it to, e.g. with an extremely long preparation time. The appliance heats up until the set cooking time has elapsed.

Cooking compartment bulbs

To light the interior of your cooking compartment, your appliance has one or more long-life LED bulbs.

However, if ever an LED bulb or the bulb's glass cover is defective, call the after-sales service. The lamp cover must not be removed.

Customer service

Our after-sales service is there for you if your appliance needs to be repaired. We will always find an appropriate solution, also in order to avoid after-sales personnel having to make unnecessary visits.

E number and FD number

When calling us, please give the full product number (E no.) and the production number (FD no.) so that we can provide you with the correct advice. The rating plate bearing these numbers can be found when you open the appliance door.

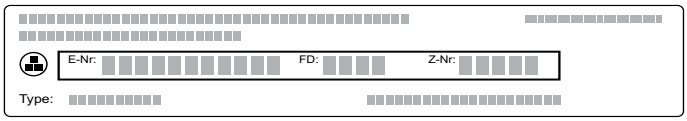

To save time, you can make a note of the number of your appliance and the telephone number of the after-sales service in the space below, should it be required.

E no.		**FD no.**	

After-sales service ☏	

Please note that a visit from an after-sales service engineer is not free of charge, even during the warranty period.

Please find the contact data of all countries in the enclosed customer service list.

To book an engineer visit and product advice

GB 0344 892 8979
Calls charged at local or mobile rate.

IE 01450 2655
0.03 € per minute at peak. Off peak 0.0088 € per minute.

Rely on the professionalism of the manufacturer. You can therefore be sure that the repair is carried out by trained service technicians who carry original spare parts for your appliances.

Dishes

You can use the "Assist" operating mode to prepare a wide variety of food. The appliance selects the optimal settings for you.

To achieve good results, the cooking compartment must not be too hot for the type of food you have selected. If it is, a message will appear on the display. Allow the cooking compartment to cool down and start again.

Information on the settings

- The cooking result depends on the quality of the food and the size and type of cookware. For an optimal cooking result, use food that is in good condition and chilled meat only. For frozen food, use food straight out of the freezer only.
- For some food, a temperature, heating mode and cooking time is suggested. The temperature and the cooking time can be changed according to your requirements.
- For other dishes, you will be asked to enter the weight. Always enter the total weight unless the appliance asks for something different. The appliance will then apply the time and temperature settings for you.
  It is not possible to set weights outside of the intended weight range.
- When roasting dishes for which the appliance will apply the temperature selection for you, temperatures of up to 300 °C can be saved. Therefore, make sure that you use cookware that is sufficiently heat resistant.
- Information is provided, e.g. on cookware, shelf position or the addition of liquid when cooking meat. Some food requires turning or stirring, etc., during cooking. This is shown in the display shortly after operation starts. An audible signal will remind you at the right time.
- Information on the right kind of cookware to use and tips and tricks for the preparation can be found at the end of the instruction manual. ⟶ *"Tested for you in our cooking studio" on page 36*

Microwave

For some food, the microwave is automatically activated. Using the microwave significantly reduces cooking time – cooking time is virtually cut in half. The appliance instructs you to use cookware that is suitable for the microwave. The "Microwave" section provides information on the type of cookware that is suitable.
⟶ *"Microwave" on page 19*

Selecting a dish

The dishes are arranged in a uniform structure:

- Category
- Food
- Dish

The following table lists the categories with the corresponding food. One or more dishes are listed beside each food.

Categories	Food
Cake	Cakes in tins
	Cakes on baking trays
	Small baked items
	Biscuits
Bread, bread rolls	Bread
	Bread rolls
Pizza, savoury cakes	Pizza
	Savoury cakes, quiches
Bakes, soufflés	Lasagne, fresh
	Soufflé in individual moulds
	Fruit crumble
	Yorkshire pudding
Frozen products	Pizza
	Bread rolls
	Bakes
	Potato products
	Poultry, fish
Poultry	Chicken
	Duck, goose
	Turkey
Meat	Pork
	Beef
	Lamb
	Meat dishes
Fish	Fish
	Fish fillets
Side dishes, vegeta-bles	Vegetables
	Potatoes
	Rice
	Cereals
Defrosting food	Bread, bread rolls
	Cake
	Meat, poultry
	Fish

Applying settings for dishes

You will be guided through the entire setting process for your chosen food.

Use the rotary selector to scroll through the individual levels.

1. Touch the **Menu** field.
   The list of operating modes are displayed.
2. Touch the "Assist" text field.
   The categories are displayed.
3. Touch the required category.
   The foods in this category are displayed.
4. Touch the required food.
   The individual dishes are displayed.
5. Touch the required dish.
   The settings for this dish appear on the display. For many dishes, you can change the settings to suit your needs.
   For some dishes, you must set the weight instead.
6. Press the ▷ Start/Stop button to start.
   The cooking time counts down on the display.

The appliance begins to heat up.

Once the cooking time has elapsed, an audible signal sounds. The appliance stops heating.

When your dish is ready, switch off the appliance using the ⏻ On/Off button.

Continue cooking

After the cooking time has ended, you can leave some dishes to continue cooking if you are not satisfied with the cooking result.

A query appears on the display, which asks if you want to continue cooking. If you want to continue cooking, touch the "Extend cooking time" text field. A cooking time is suggested, which can be changed. Press the ▷ Start/Stop button to start.

Note: You can extend the cooking time as often as required.

If you are satisfied with the cooking result, touch the "Finish" text field.

Press the ⏻ On/Off button to switch off the appliance.

Setting a later end time

You can set a later end time for some dishes. Before starting the appliance, touch the "End" text field and set a later end time using the rotary selector.

The appliance switches to standby after it is started. The end time can no longer be changed.

Changing and cancelling

After starting the appliance, the settings can no longer be changed.

If you would like to cancel the operation, switch the appliance off using the ⏻ On/Off button. You can no longer pause the operation using the ▷ Start/Stop button.

Tested for you in our cooking studio

Here, you can find a selection of dishes and the ideal settings for them. We will show you which type of heating and temperature are best suited to your dish. You will get information on suitable cooking accessories and the height at which they should be placed in the oven. You will also get tips about cookware and preparation methods.

Note: A lot of steam can build up in the cooking compartment when cooking food.
Your appliance is very energy-efficient and radiates very little heat to its surroundings during operation. Due to the high difference in temperature between the appliance interior and the external parts of the appliance, condensation may build up on the door, control panel or adjacent kitchen cabinet panels. This is a normal physical phenomenon. Condensation can be reduced by preheating the oven or opening the door carefully.

Silicone moulds

For the best cooking results, we recommend dark-coloured metal baking tins/dishes.

Nevertheless, if you wish to use silicone moulds, follow the manufacturer's instructions and recipes. Silicone moulds are often smaller than normal baking tins. Quantity and recipe specifications may vary.

Baking

Here, you can find recommended settings for many dishes.

Also refer to the notes in the section on allowing dough to rise.

Only use original accessories supplied with your appliance. These have been tailored to the cooking compartment and the operating modes of your appliance.

Baking in combination with a microwave

If you bake in combination with a microwave, you can reduce the cooking time considerably.

Always use heat-resistant cookware that is suitable for use in microwaves. Observe the notes on cookware suitable for microwaves. ⟶ *"Microwave" on page 19*

In combined operation, you can use conventional baking tins made from metal. If sparks form between the baking tin and the wire rack, check whether the baking tin is clean on the outside. Change the position of the baking tin on the wire rack. If this does not help, continue baking without the microwave. The baking time will be extended.

If you use baking tins/dishes made from plastic, ceramic or glass, the baking time indicated in the settings tables will be reduced. The cake will not brown as much underneath.

Baking in combination with a microwave is only possible on one level.

Shelf positions

Use the indicated shelf positions.

Baking on one level
When baking on one level, use the following shelf position:
- Level 1

You can also prepare soufflés in a water bath in the universal pan. To do so, slide the universal pan in at level 1.

Baking on two levels
Use 4D hot air. Baked items that are placed into the oven on trays or in baking tins/dishes at the same time will not necessarily be ready at the same time.
- Universal pan: Level 3
  Baking tray: Level 1
- Baking tins/dishes on the wire rack
  First wire rack: Level 3
  Second wire rack: Level 1

By preparing several dishes at the same time, you can make energy savings of up to 45 per cent. Position baking tins/dishes next to one another or offset and vertically stacked in the cooking compartment.

Accessories

Ensure that you always use suitable accessories and that they are placed in the oven the right way around.

Wire rack
Slide the wire rack in with the imprint "Microwave" facing the appliance door, and the outer rail facing downwards.

Universal pan or baking tray
Slide the universal pan or the baking tray in carefully as far as the limit stop with the bevelled edge facing the appliance door.

When baking moist cakes or pastries with many toppings, use the universal pan so that any excess liquid does not overflow and make the cooking compartment dirty.

Baking tins
Dark- coloured metal baking tins are most suitable.

Tinplate baking tins, ceramic dishes and glass dishes extend baking time and mean that the baked item will not brown evenly.

Greaseproof paper
Only use greaseproof paper that is suitable for the selected temperature. Always cut greaseproof paper to size.

Recommended setting values

You can find the ideal heating type for various pastries in the table. The temperature and baking time are dependent on the quantity and composition of the dough. Different settings ranges are indicated for this reason. Try using the lower values at first. A lower temperature results in more even browning. If necessary, use a higher setting the next time.

Note: Baking times can not be reduced by using higher temperatures. Cakes or small baked items would only be cooked on the outside, and would not be fully baked in the middle.

The setting values apply to dishes placed into a cold cooking compartment. By doing so, you can make energy savings of up to 20 per cent. If you preheat the oven, you can reduce the indicated baking times by several minutes.

Preheating is necessary for selected dishes, and this is indicated in the table.

If you wish to follow one of your own recipes when baking, you should use a similar baked item in the table as a reference. You can find additional information in the tips on baking attached to the settings table.

Remove unused accessories from the cooking compartment. This will achieve the best possible cooking results and energy savings of up to 20 per cent.

Types of heating used:
- 4D hot air
- Top/bottom heating
- Pizza setting

Dish	Accessories/cookware	Shelf position	Type of heating	Temperature in °C	MW power in watts	Cooking time in mins.
One level baking						
Victoria sponge cake	2x Ø20 cm tins	1		160-170*	-	20-30
Light fruit cake	high Ø20cm tin	1		140-160*	-	70-90
Light fruit cake	high Ø20 cm tin	1		140-150	90	50-60
Rich Fruit Cake	high Ø23cm tin	1		130-150	-	150-180
Rich Fruit Cake	high Ø23cm tin	1		130-140	90	80-90
Fruit crumble	flat glass dish	2		150-170*	-	30-45
Sponge Cake (fatless), 3 eggs	springform cake tin, Ø26 cm	1		160-170*	-	30-45
Sponge flan, 6 eggs	springform cake tin, Ø28 cm	1		150-170*	-	30-50
Swiss Roll	swiss roll tin	2		180-190*	-	10-18
Fruit Pie	plate Ø20cm or pie tin	1		180-190*	-	45-50
Quiche	quiche tin (dark coated)	1		190-210	-	30-45
(White) Bread	loaf tin (1x 900 g or 2x 450 g)	1		190-210*	-	20-30
Scones	baking tray	1		180-200*	-	10-14
Biscuits	baking tray	2		140-160*	-	10-25
Small cakes	12-cup-tin	1		140-160*	-	20-35
Puff pastry slices	baking tray	2		170-190*	-	20-45
Jam tarts	12-cup-tin	2		160-180*	-	15-30
Meringue	baking tray	2		80-90*	-	120-150
Pavlova	baking tray	2		90-100*	-	120-180
Soufflé	1,2 L-soufflé dish	1		160-170*	-	40-50
Soufflé	individual moulds	1		170-190	-	65-75
Choux pastry	baking tray	1		190-210*	-	30-40
Meat Pie	rectangular pie tin	1		170-190	-	50-70
Yorkshire Pudding	12-cup-tin	1		200-220*	-	15-25
Jacket potatoes	baking tray	2		150-170	-	75-90
Pizza, homemade	baking tray	1		200-220	-	20-30
Pizza, homemade	baking tray	1		220-230	-	25-30
Pizza, homemade, thin base	pizza tray	1		210-230	-	20-30
Multishelf baking						
Scones, 2 levels	2 baking trays	3+1		180-200*	-	12-16
Biscuits, 2 levels	2 baking trays	3+1		140-160*	-	15-30
Small cakes, 2 levels	2x 12-cup-tins	3+1		140-160*	-	22-32
Puff pastry slices, 2 levels	2 baking trays	3+1		170-190*	-	20-45

* Preheat

Dish	Accessories/cookware	Shelf position	Type of heating	Temperature in °C	MW power in watts	Cooking time in mins.
Jam tarts, 2 levels	2x 12-cup-tins	3+1		160-180*	-	20-35
Meringues, 2 levels	2 baking trays	3+1		80-90*	-	120-150
Jacket potatoes, 2 levels	universal pan + baking tray	3+1		150-170*	-	75-90
Pizza, homemade, 2 levels	universal pan + baking tray	3+1		180-200	-	35-45
* Preheat						

Tips on baking

You want to find out whether the cake is completely cooked in the middle.	Push a cocktail stick into the highest point on the cake. If the cocktail stick comes out clean with no dough residue, the cake is ready.
The cake collapses.	Next time, use less liquid. Alternatively, set the temperature to be 10 °C lower and extend the baking time. Adhere to the specified ingredients and preparation instructions in the recipe.
The cake has risen in the middle but is lower around the edge.	Only grease the base of the springform cake tin. After baking, loosen the cake carefully with a knife.
The fruit juice overflows.	Next time, use the universal pan.
Small baked items stick to one another during baking.	There should be a gap of approx. 2 cm around each item. This gives enough space for the baked items to expand well and brown on all sides.
The cake is too dry.	Set the temperature 10 °C higher and shorten the baking time.
The cake is generally too light in colour.	If the shelf position and the cookware are correct, then you should increase the temperature if necessary or extend the baking time.
The cake is too light on top, and too dark underneath.	Bake the cake one level higher in the oven the next time.
The cake is too dark on top, and too light underneath.	Bake the cake one level lower in the oven the next time. Select a lower temperature and extend the baking time.
Cakes baked in a tray or tin are too brown at the back.	Place the baking tray in the middle of the accessories, not directly against the back wall.
The whole cake is too dark.	Select a lower temperature next time and extend the baking time if necessary.
The cake is unevenly browned.	Select a slightly lower temperature. Protruding greaseproof paper can affect the air circulation. Always cut greaseproof paper to size. Ensure that the baking tin does not stand directly in front of the openings in the cooking compartment back wall. When baking small items, you should use similar sizes and thicknesses wherever possible.
You were baking on several levels. The items on the top baking tray are darker than those on the lower baking tray.	Always select 4D hot air when baking on several levels. Baked items that are placed into the oven on trays or in baking tins/dishes at the same time will not necessarily be ready at the same time.
The cake looks good, but is not cooked properly in the middle.	Use a lower temperature and bake slightly longer; if necessary, add slightly less liquid. For cakes with a moist topping, bake the base first. Sprinkle it with almonds or breadcrumbs and then place the topping on top.
The cake cannot be turned out of the dish when it is turned upside down.	Allow the cake to cool down for 5 to 10 minutes after baking. If it still sticks, carefully loosen the cake around the edges again using a knife. Turn the cake tin upside down again and cover it several times with a cold, wet cloth. Next time, grease the baking tin/dish and sprinkle with breadcrumbs.

Roasting and braising

Here, you can find information on roasting and braising poultry and meat. You can find the ideal settings for many dishes in the settings tables.

Poultry

For duck or goose, pierce the skin on the underside of the wings. This allows the fat to run out.

If using duck breast, score the skin. Do not turn duck breasts.

When you turn poultry, ensure that the breast side or the skin side is underneath at first.

Poultry will turn out particularly crispy and brown if you baste it towards the end of the roasting time with butter, salted water or orange juice.

Meat

Baste lean meat with fat as required or cover it with strips of bacon.

Score the rind crosswise. If you turn the joint when cooking, ensure that the rind is underneath at first.

When the joint is ready, turn off the oven and allow it to rest for another 10 minutes in the cooking compartment. This allows the meat juices to be better distributed. Wrap the joint in aluminium foil if necessary. The recommended resting time is not included in the cooking time indicated.

Roasting on the wire rack

On the wire rack, poultry and meat will become very crispy on all sides. Roasting on the wire rack is well suited for larger poultry or for multiple pieces at the same time.

Depending on the size and type of the meat, add up to ½ litres of water to the universal pan. Any dripping fat and meat juices will be caught. You can prepare a sauce using these meat juices. In addition, less smoke is generated, and the cooking compartment stays cleaner.

Slide the wire rack in at the indicated shelf position with the imprint "Microwave" facing the appliance door and the outer rail facing downwards. In addition, slide the universal pan in at the shelf position underneath with the slanted edge facing the appliance door.

Roasting and braising in cookware

It is more convenient to roast and braise meat in cookware. You can take the joint out of the cooking compartment more easily in the cookware, and prepare the sauce in the cookware itself.

Only use cookware which is suitable for use in an oven. Check whether the cookware fits in the cooking compartment.

Glass cookware is most suitable. Place hot glass cookware onto a dry mat after cooking. If the surface is damp or cold, the glass may crack.

Add in a little liquid for roasting if the meat is lean. A covering of approx. ½ cm depth should be applied to the base of any glass cookware.

The amount of liquid is dependent on the type of meat, the cookware material and also on whether or not a lid is used. If preparing meat in an enamelled or dark metal roasting dish, it will need a little more liquid than if cooked in glass cookware.

The steam evaporates in the cookware when roasting. Carefully pour in more liquid if required.

Shiny roasting dishes made from stainless steel or aluminium reflect heat like a mirror and are therefore not particularly suitable. The meat cooks more slowly and will not brown so much. Use a higher temperature and/or a longer cooking time.

Observe the manufacturer's instructions for your roasting cookware.

Roasting in uncovered cookware
It is best to use a deep roasting tin/dish for roasting poultry and meat. Place the tin/dish onto the wire rack. If you do not have any suitable cookware, use the universal pan.

Braising in covered cookware
When preparing food with covered cookware, the cooking compartment remains considerably cleaner. Ensure that the lid fits well and closes properly. Place the cookware onto the wire rack.

The distance between the meat and the lid must be at least 3 cm. The meat may rise.

Very hot steam may escape when opening the lid after cooking. Lift the lid at the rear, so that the hot steam can escape away from you.

If necessary, braise the meat first by searing it. Add water, wine, vinegar or a similar liquid to the braising liquid. A covering at least 2 cm deep should be applied to the base of the cookware.

The steam evaporates in the cookware when roasting. Carefully pour in more liquid if required.

Roasting in combination with a microwave

Certain foodstuffs can be prepared in combination with a microwave. The cooking time is considerably reduced by doing so.

As opposed to conventional operation, the cooking time is based on the total weight when roasting in combination with a microwave.

Tip: If you have quantities other than those indicated in the settings tables, the following basic rule applies: double the quantity equates to roughly double the cooking time.

Always use heat-resistant cookware that is suitable for use in microwaves. Roasting dishes made from metal or Römertopf dishes are only suitable for roasting without using the microwave. Observe the notes on cookware suitable for microwaves. → *"Microwave" on page 19*

Caution!

If you use an oven bag, do not seal it shut with metal clips. Use kitchen string. Do not use metal skewers for roulades. Sparks may form as a result.

Recommended setting values

In the table, you can find the ideal heating type for poultry and meat. Temperature and cooking time depend on the quantity, composition and temperature of the food. Different settings ranges are indicated for this reason. Try using the lower values at first. You can increase the temperature next time if necessary.

The setting values are based on the assumption that unstuffed, chilled, ready-to-roast poultry and meat are placed into a cold cooking compartment. By doing so, you can make energy savings of up to 20 per cent. If you preheat the oven, the indicated cooking times will be reduced by several minutes.

In the table, you can find specifications for poultry and meat with default values for the weight. If you wish to prepare heavier poultry or meat, use the lower temperature in every case. If roasting several joints, use the weight of the heaviest piece as a basis for determining the cooking time. The individual pieces should be approximately equal in size.

A general rule: the larger the poultry or piece of meat is, the lower the cooking temperature and the longer the cooking time.

Turn the poultry and meat after approx. ½ to ⅔ of the indicated time.

Remove unused accessories from the cooking compartment. This will achieve the best possible cooking results and energy savings of up to 20 per cent.

Types of heating used:
- 4D hot air
- Circulated air grilling

Dish	Accessories/cookware	Shelf position	Type of heating	Temperature in °C	MW power in watts	Cooking time in mins.
Beef						
Slow roast joint	cookware, uncovered	1		140-150	-	35+40
Top side / Top rump	cookware, uncovered	1		160-170	-	30+25
Lamb						
Leg (bone-in)	cookware, uncovered	1		160-170	-	25+25
Shoulder (bone-in)	cookware, uncovered	1		160-170	-	25+20
Shoulder (boned and rolled)	cookware, uncovered	1		170-180	-	25+25
Rack of lamb***	cookware, uncovered	1		180-190*	-	15+25
Pork						
Roast joint	cookware, uncovered	1		180-190	-	30+35
Loin joint	cookware, uncovered	1		180-190	-	35+35
Belly	cookware, uncovered	1		170-180	-	30+25
Gammon joint	cookware, uncovered	1		160-170	-	30+30
Poultry						
Chicken, whole	cookware, uncovered	1		170-180	-	25+15
Chicken, portion, 200-250 g each**	cookware, uncovered	1		190-200	-	35-45
Duck	cookware, uncovered	1		180-190	-	25+20
Turkey, crown****	cookware, uncovered	1		150-160	-	20+15
Turkey, thighs	cookware, uncovered	1		170-180	-	25+25
Turkey, whole, 4-8 kg*****	universal pan	1		150-160	-	12+12
Meat dishes						
Meat loaf	cookware, uncovered	1		170-180	-	20+35
Meat loaf, 1 kg	cookware, uncovered	1		170-190	360	30-40
Casserole						
Diced meat (beef, pork, lamb), 500 g meat	cookware, covered	1		140*	-	100-120
Braising steak	cookware, covered	1		140	-	65+60
Chicken pieces (boned), 500 g meat	cookware, covered	1		140*	-	90-100
Complete meal						
With beef	wire rack + uncovered cookware on wire rack	3+1		160, then 200 (Yorkshire Pudding)	-	calculation for meat (see table above) + 15-25 for Yorkshire Pudding
With chicken	wire rack + uncovered cookware on wire rack	3+1		180	-	calculation for chicken (see table above)

* Preheat
** skin side down
*** without fat layer (best and neck), do not turn
**** bone side down, do not turn
***** turn after app. 1 hour

Tips on roasting and braising

The cooking compartment becomes very dirty.	Prepare your food in an enclosed roaster with higher temperature or use the grill tray. You will achieve the best roasting results if you use the grill tray. The grill tray can be bought later as a special accessory.
The roast is too dark and the crackling is burned in places, and/or the roast is too dry.	Check the shelf position and temperature. Select a lower temperature the next time and reduce the roasting time if necessary.
The crackling is too thin.	Increase the temperature or switch on the grill briefly at the end of the roasting time.
The roast looks good but the juices are burnt.	Next time, use a smaller roasting dish and add more liquid if necessary.
The roast looks good but the juices are too clear and watery.	Next time, use a larger roasting dish and add less liquid if necessary.
The meat gets burned during braising.	The roasting dish and lid must fit together well and close properly. Reduce the temperature and add more liquid when braising if necessary.
The roast is not well-done enough.	Carve the roast. Prepare the sauce in the roasting dish and add the sliced roast meat to the sauce. Finish cooking the meat using the microwave only.

Grilling

Here, you can find information on grilling poultry, meat and fish, as well as toast. You can find the ideal settings for certain dishes in the settings tables.

Grilling with circulated air

Circulated air grilling is very well suited to the preparation of whole poultry, fish, and also meat, e.g. roast pork with crackling.

Poultry
For duck or goose, pierce the skin on the underside of the wings. This allows the fat to run out.

If using duck breast, score the skin. Do not turn duck breasts.

When you turn poultry, ensure that the breast side or the skin side is underneath at first.

Poultry will turn out particularly crispy and brown if you baste it towards the end of the roasting time with butter, salted water or orange juice.

Meat
Baste lean meat with fat as required or cover it with strips of bacon.

Score the rind crosswise. If you turn the joint when cooking, ensure that the rind is underneath at first.

When the joint is ready, turn off the oven and allow it to rest for another 10 minutes in the cooking compartment. This allows the meat juices to be better distributed. Wrap the joint in aluminium foil if necessary. The recommended resting time is not included in the cooking time indicated.

Fish
Fish cooked whole does not have to be turned. Place the whole fish into the cooking compartment in swimming position with the dorsal fin facing upwards. Placing half a potato or a small oven-proof container in the stomach cavity of the fish will provide stability.

You can tell when the fish is cooked because the dorsal fin can be removed easily.

Roasting on the wire rack

On the wire rack, poultry and meat will become very crispy on all sides. Roasting on the wire rack is well suited for larger poultry or for multiple pieces at the same time.

Depending on the size and type of the meat, add up to ½ litres of water to the universal pan. Any dripping fat and meat juices will be caught. You can prepare a sauce using these meat juices. In addition, less smoke is generated, and the cooking compartment stays cleaner.

Slide the wire rack in at the indicated shelf position with the imprint "Microwave" facing the appliance door and the outer rail facing downwards. In addition, slide the universal pan in at the shelf position underneath with the slanted edge facing the appliance door.

Roasting in cookware

It is more convenient to roast and braise meat in cookware. You can take the joint out of the cooking compartment more easily in the cookware, and prepare the sauce in the cookware itself.

Only use cookware which is suitable for use in an oven. Check whether the cookware fits in the cooking compartment.

Glass cookware is most suitable. Place hot glass cookware onto a dry mat after cooking. If the surface is damp or cold, the glass may crack.

Add in a little liquid if the meat is lean. A covering of approx. ½ cm depth should be applied to the base of any glass cookware.

The quantity of liquid is dependent on the type of meat, the cookware material and also on whether or not a lid is used. If preparing poultry, meat or fish in an enamelled or dark metal roasting dish, it will need a little more liquid than if cooked in glass cookware.

The steam evaporates in the cookware when roasting. Carefully pour in more liquid if required.

Shiny roasting dishes made from stainless steel or aluminium reflect heat like a mirror and are therefore not particularly suitable. The meat cooks more slowly and will not brown so much. Use a higher temperature and/or a longer cooking time.

Observe the manufacturer's instructions for your roasting cookware.

Uncovered cookware
Use a deep roasting tin/dish for roasting meat. Place the tin/dish onto the wire rack. If you do not have any suitable cookware, use the universal pan.

Covered cookware
When cooking with covered cookware, the cooking compartment remains considerably cleaner. Ensure that the lid fits well and closes properly. Place the cookware onto the wire rack.

The distance between the meat and the lid must be at least 3 cm. The meat may rise.

Very hot steam may escape when opening the lid after cooking. Lift the lid at the rear, so that the hot steam can escape away from you.

If necessary, braise the meat first by searing it. Add water, wine, vinegar or a similar liquid to the braising liquid. A covering approx. 1-2 cm deep should be applied to the base of the cookware.

The steam evaporates in the cookware when roasting. Carefully pour in more liquid if required.

Meat can also become crispy in a covered roasting dish. To do so, use a roasting dish with a glass lid and set a higher temperature.

Roasting in combination with a microwave

Certain foodstuffs can be prepared in combination with a microwave. The cooking time is considerably reduced by doing so.

As opposed to conventional operation, the cooking time is based on the total weight when roasting in combination with a microwave.

Tip: If you have quantities other than those indicated in the settings tables, the following basic rule applies: double the quantity equates to roughly double the cooking time.

Always use heat-resistant cookware that is suitable for use in microwaves. Roasting dishes made from metal or Römertopf dishes are only suitable for roasting without using the microwave. Observe the notes on cookware suitable for microwaves. → *"Microwave" on page 19*

Caution!

If you use an oven bag, do not seal it shut with metal clips. Use kitchen string. Do not use metal skewers for roulades. Sparks may form as a result.

Grilling flat pieces

Flat pieces of poultry, meat and fish, such as steaks, drumsticks and burgers, can be prepared well using the "Grill" heating type. Excellent results are also achieved when grilling toast.

Grilling

Keep the appliance door closed when using the grill. Never grill with the appliance door open.

Slide the wire rack in at the indicated shelf position with the imprint "Microwave" facing the appliance door and the outer rail facing downwards. In addition, slide the universal pan in at least one shelf position lower, with the slanted edge facing the appliance door. Any dripping fat will be caught.

When grilling, try wherever possible to use pieces of food which are of a similar thickness and weight. This will allow them to brown evenly and remain succulent and juicy. Place the food to be grilled directly onto the wire rack.

Use tongs to turn the pieces of food you are grilling. If you pierce the meat with a fork, the juices will run out and it will become dry.

Do not add salt until after the meat has been grilled. Salt draws water from the meat.

Notes

- The grill element switches itself continuously on and off; this is normal. The grill setting determines how frequently this occurs.
- Smoke may be produced when grilling.

Recommended setting values

In the table, you can find the ideal heating type for your poultry, meat and fish, in addition to toast. Temperature and cooking time depend on the quantity, composition and temperature of the food. Settings ranges are indicated for this reason. Try using the lower values at first. You can use a higher setting next time if necessary.

The setting values are based on the assumption that unstuffed, chilled, ready-to-roast poultry, meat and fish are placed into a cold cooking compartment.

In the table, you can find specifications for poultry, meat and fish with default values for the weight. If you wish to prepare heavier poultry, meat or fish, use the lower temperature in every case. If roasting several joints, use the weight of the heaviest piece as a basis for determining the cooking time. The individual pieces should be approximately equal in size.

A general rule: the larger the poultry, meat or fish is, the lower the cooking temperature and the longer the cooking time.

Turn the poultry, meat and fish after approx.½ to ⅔ of the indicated time.

Remove unused accessories from the cooking compartment. This will achieve the best possible cooking results and energy savings of up to 20 per cent.

Types of heating used:
- 4D hot air
- Circulated air grilling
- Grill, large area

Dish	Accessories/cookware	Shelf position	Type of heating	Temperature in °C / Grill setting	MW power in watts	Cooking time in mins.
Beef						
Steaks, height 2-3 cm	wire rack	2		3	-	1st side 8-10
						2nd side 5-7
Burger, height 1-2 cm	wire rack	2		3*	-	1st side 6-8
						2nd side 4-6
Top side / Top rump	wire rack	2		150-160	-	30+30
Lamb						
Steaks, height 2-3 cm	wire rack	2		3*	-	1st side 8-10
						2nd side 4-6
Chops, height 2-3 cm	wire rack	2		3	-	1st side 6-8
						2nd side 6-8
Leg (bone-in)	cookware, uncovered	1		170-180	-	25+30
Shoulder (bone -in)	cookware, uncovered	1		170-190	-	25+15
Shoulder (boned and rolled)	cookware, uncovered	1		170-180	-	20+15
Rack of lamb	cookware, uncovered	1		190-200	-	15+25
Pork						
Steaks, height 2 cm	wire rack	3		2	-	1st side 12-14
						2nd side 6-8
Chops, height 2-3 cm	wire rack	2		3*	-	1st side 10-12
						2nd side 9-10
Burger, height 1-2 cm	wire rack	2		3*	-	1st side 6-8
						2nd side 4-6
Bacon rashers	wire rack	2		3***	-	1st side 4-5
						2nd side 3-4
Sausages, thickness 2-4 cm	wire rack	2		3****	-	10-15
Roast joint	cookware, uncovered	1		180-200	-	30-40
Loin joint	cookware, uncovered	1		170-180	-	35+35
Belly	cookware, uncovered	1		200-220	-	30+25
Gammon joint	cookware, uncovered	2		180-200	-	30+25
Poultry						
Chicken drumstick, 150 g each	wire rack	2		210-230	-	20-30
Chicken breast, boned, 150 g each	wire rack	2		3**	-	1st side 10-15
						2nd side 10-15
Chicken breast, boned, 2 pieces 150 g each	cookware, uncovered	1		190-210	180	25-30
Chicken, whole	wire rack	1		200-220	-	25+15
Chicken, whole, 1 kg	cookware, covered	1		230-250	360	25-35

* Preheat
**Preheat 3 minutes
*** Preheat 5 minutes
**** Preheat 3 minutes, turn over several times
***** Skin side down

Dish	Accessories/cookware	Shelf position	Type of heating	Temperature in °C / Grill setting	MW power in watts	Cooking time in mins.
Chicken, portion, 200-250 g each*****	wire rack	2		200-220	-	30-45
Chicken, portion 4 pieces 250 g each*****	cookware, uncovered	1		190-210	360	20-30
Duck, 2-3 kg	cookware, uncovered	1		190-200	-	20+20
Duck, 2 kg	universal pan	1		170-190	180	60-80
Turkey thighs	cookware, uncovered	1		180-190	-	35+20
Turkey, whole, 4-8 kg	universal pan	1		140-160	-	12+12
Fish						
Trout, whole, 300 g each	cookware, uncovered	1		170-190	-	20-30
Trout, whole, 300 g each	wire rack	2		2	90	15-20
Fillets, each 150 g	wire rack	2		1**	-	1st side 5-10
						2nd side 5-10
Toast						
Grilling white bread	wire rack	3		3	-	2-6

* Preheat
**Preheat 3 minutes
*** Preheat 5 minutes
**** Preheat 3 minutes, turn over several times
***** Skin side down

Convenience products

Here, you can find the ideal settings for preparing chilled and frozen food.

Only use original accessories supplied with your appliance. These have been tailored to the cooking compartment and the operating modes of your appliance.

Tips

- The cooking result greatly depends on the quality of the food. Pre-browning and unevenness may already be present on the packaged product.
- Do not use frozen products that are heavily frosted. Remove any ice on the food.
- Distribute foods which are in pieces, such as bread rolls and potato products, so that they are spread flat and evenly on the accessories. Leave a little space between the individual pieces.
- Observe the instructions on the packaging.

Preparing food in combination with a microwave

If you prepare food in combination with a microwave, you can reduce the cooking time considerably.

Always use heat-resistant cookware that is suitable for use in microwaves. Observe the notes on cookware suitable for microwaves. → *"Microwave" on page 19*

In combined operation, you can use conventional baking tins made from metal. If sparks form between the baking tin and the wire rack, check whether the baking tin is clean on the outside. Change the position of the baking tin on the wire rack. If this does not help, continue preparing without the microwave. The cooking time will be extended.

If you use baking tins/dishes made from plastic, ceramic or glass, the cooking time indicated in the settings tables will be reduced.

Cooking in combination with a microwave is only possible on one level.

Take ready-to-eat meals out of the packaging. You can cook more quickly and evenly using cookware which is suitable for use in microwaves.

Shelf positions

Use the indicated shelf positions.

Baking on one level
When baking on one level, use the following shelf position:
- Level 1

Baking on two levels
Use 4D hot air. Baked items that are placed into the oven on trays or in baking tins/dishes at the same time will not necessarily be ready at the same time.
- Universal pan: Level 3
  Baking tray: Level 1

Accessories

Ensure that you always use suitable accessories and that they are placed in the oven the right way around.

Wire rack
Slide the wire rack in with the imprint "Microwave" facing the appliance door, and the outer rail facing downwards.

Universal pan or baking tray
Slide the universal pan or the baking tray in carefully as far as the limit stop with the bevelled edge facing the appliance door.

Greaseproof paper
Only use greaseproof paper that is suitable for the selected temperature. Always cut greaseproof paper to size.

Recommended setting values

In the table, you can find the ideal heating type for various dishes. Temperature and cooking time depend on the quantity and composition of the product. Setting ranges are indicated for this reason. Try using the lower values at first. A lower temperature results in more even browning. You can use a higher setting next time if necessary.

Note: Cooking times cannot be reduced by using higher temperatures. The dish would only be cooked on the outside, but would not be fully cooked in the middle.

The setting values apply to dishes placed into a cold cooking compartment. By doing so, you can make energy savings of up to 20 per cent. If you preheat the oven, the indicated cooking times will be reduced by several minutes.

Preheating is necessary for selected dishes, and this is indicated in the table.

Remove unused accessories from the cooking compartment. This will achieve the best possible cooking results and energy savings of up to 20 per cent.

Types of heating used:
- 4D hot air
- Top/bottom heating
- Circulated air grilling
- Pizza setting

Dish	Accessories/cookware	Shelf position	Type of heating	Temperature in °C	MW power in watts	Cooking time in mins.
Pizza, chilled						
Pizza, chilled	wire rack	1		210-230	-	10-20
Pizza, frozen						
Pizza, thin base	wire rack	1		210-230	-	10-20
Pizza, thin base, 1 piece	universal pan	1		210-230	90	10-20
Pizza, thin base, 2 levels	2 wire racks	3+1		200-220	-	15-25
Pizza, thick base	wire rack	1		180-200	-	20-30
Pizza, thick base, 1 piece	universal pan	1		200-220	90	15-25
Pizza, thick base, 2 levels	2 wire racks	3+1		160-180	-	25-35
Pizza baguette	wire rack	1		200-220	-	20-30
Pizza baguette, 2 pieces	universal pan	1		180-200	90	10-20
Potatoe products, frozen						
Oven chips*	baking tray	1		190-210	-	20-30
Oven chips, 500 g*	universal pan	1		250-270	180	15-20
Oven chips, 2 levels*	universal pan + baking tray	3+1		200-220	-	30-40
Croquettes	baking tray	1		200-220	-	15-25
Hash browns*	universal pan	2		200-220	-	20-30
Potatoe wedges	baking tray	1		200-220	-	20-30
Baked goods, frozen, prebaked						
Rolls, baguettes	universal pan	2		200-220	-	15-25
Rolls, baguettes, 2 levels	grid + universal pan	3+1		160-180	-	15-25
Fried food, frozen						
Fish fingers*	baking tray	1		220-240	-	10-20
Chicken nuggets	universal pan	2		200-220	-	10-20
Chicken nuggets	universal pan	1		190-210	360	15-20

* Turn during cooking

Dish	Accessories/cookware	Shelf position	Type of heating	Temperature in °C	MW power in watts	Cooking time in mins.
Food, chilled						
Lasagna, 500 g	ovenproof dish on wire rack	1		180-200	-	30-40
Lasagna, 1,5 kg	ovenproof dish on universal pan	1		180-200	-	35-45
Food, frozen						
Lasagna, 500 g	ovenproof dish on universal pan	1		190-210	-	30-40
Lasagna, 500 g	ovenproof dish on wire rack	1		200-210	360	18-23
Lasagna, 1,5 kg	ovenproof dish on wire rack	1		160-180	-	60-80
* Turn during cooking						

Microwave

Preparing food in a microwave is ideal if time is of the essence.

Place the cookware onto the wire rack. Always use heat-resistant cookware that is suitable for use in microwaves. Observe the notes on cookware suitable for microwaves. → *"Microwave" on page 19*

Slide the wire rack in at the indicated shelf position with the imprint "Microwave" facing the appliance door and the outer rail facing downwards.

Food which lies flat will cook more quickly than food which is piled high. Arrange the food as flat as possible in the cookware for this reason.

Cereal products foam a lot during cooking. For all cereal products, such as rice, use tall cookware with a lid.

This will help the food retain its flavour. This means that you can use salt and seasonings sparingly.

If you cannot find any indicated settings for your food quantity, you should extend or reduce the cooking time according to the following basic rule: double the quantity equates to roughly double the cooking time.

Stir or turn the food two to three times during this time. After heating up the food, leave it to rest for two to three minutes to compensate for the temperature difference.

The food transfers heat to the cookware. It can become very hot when only using the microwave for preparation.

Shelf position

Slide the wire rack in at level 1 with the cookware on it.

Steaming fish in the microwave

You can also steam fish in the microwave.

To do so, use enclosed cookware that is suitable for microwave use or use a plate or microwave film to cover the dish. Observe the notes on cookware suitable for microwaves. → *"Microwave" on page 19*

This will help retain the flavour and means you can use salt and seasonings sparingly. If cooking fish whole, add one to three tablespoons of water or lemon juice.

After cooking, leave the fish to rest for another 2-3 minutes to compensate for the temperature difference.

Take ready-to-eat meals out of the packaging. You can cook more quickly and evenly using cookware which is suitable for use in microwaves.

Custard made from custard powder

Mix custard powder with milk and sugar in a tall, microwave-suitable container according to the information on the packaging. Use the settings indicated in the table.

As soon as the milk starts to rise, stir thoroughly. Repeat this step two to three times.

Making rice pudding

1. Weigh the rice and add 4 times as much milk.
2. Pour the rice and milk into a tall container which is suitable for microwave use.
3. Use the settings indicated in the table.
4. As soon as the milk starts to rise, stir thoroughly and reduce the microwave power as indicated in the table.
   Stir several times whilst it continues to cook.

Compote

Weigh the fruit in a microwave-suitable container and add a tablespoon of water for every 100 g. Add sugar and spices according to taste. Cover the container and use the settings indicated in the table.

Stir two to three times during the cooking time.

Microwave popcorn

Use flat, heat-resistant glass cookware, e.g. the lid of an ovenproof dish. Do not use porcelain or heavily curved plates.

Place the popcorn bag onto the cookware with the labelled side facing downwards. Use the settings indicated in the table. The time may need to be adjusted, depending on the product and quantity in question.

Remove the popcorn bag after 1½ minutes and shake it to ensure that the popcorn doesn't burn. Wipe the cooking compartment clean after preparation.

⚠ Warning – Risk of burns!
Airtight packaging may burst when food is heated. Always observe the instructions on the packaging. Always use oven gloves to remove dishes from the cooking compartment.

Recommended setting values

Tip: You can find additional applications which only use the microwave in sections "Defrosting" and "Heating food".

Type of heating used:
- Microwave

Dish	Cookware	Shelf position	Type of heating	MW power in watts	Cooking time in mins.
Fish					
Fish fillet, plain, braised, 400 g	cookware, covered	1		600	4
				360	3-8
Vegetables, fresh					
Vegetable, fresh, 250 g*	cookware, covered	1		600	8-12
Vegetable, fresh, 500 g*	cookware, covered	1		600	12-17
Vegetables, frozen					
Spinach, 450 g*	cookware, covered	1		600	13-18
Mixed vegetables, 250 g*	cookware, covered	1		600	10-14
Mixed vegetables, 500 g*	cookware, covered	1		600	15-20
Rice					
Long-grain rice, 250 g + 500 ml water	cookware, covered	1		600	7-9
Long-grain rice, 250 g + 500 ml water	cookware, covered	1		180	13-16
Brown rice, 250 g + 650 ml water	cookware, covered	1		600	11-13
Brown rice, 250 g + 650 ml water	cookware, covered	1		180	25-30
Risotto, 250 g + 900 ml water	cookware, covered	1		600	12-14
Risotto, 250 g + 900 ml water	cookware, covered	1		180	22-27
Cereals					
Couscous, 250 g + 500 ml water	cookware, covered	1		600	6-8
Dessert					
Custard out of custard powder*	cookware, covered	1		600	5-8
Rice pudding, 125 g + 500 ml milk*	cookware, covered	1		600	10
Rice pudding, 125 g + 500 ml milk *	cookware, covered	1		180	20-25
Fruit compote, 500 g	cookware, covered	1		600	9-12
Microwavepopcorn, 1 package á 100 g**	cookware, uncovered	1		600	4-6

* Turn 1-2 times during cooking
** Lay unopened package on the cookware

Yogurt

You can make your own yogurt using your appliance.

Preparing yogurt

Remove accessories and shelves from the cooking compartment. The cooking compartment must be empty.

1. Heat 1 litre of milk (3.5 % fat) to 90 °C on the hob and then cool down to 40 °C.
   It is sufficient to heat UHT milk to 40 °C.
2. Stir in 150 g (chilled) yogurt.
3. Pour into cups or small jars and cover with cling film.
4. Place the cups or jars onto the cooking compartment floor and use the settings indicated in the table.
5. After preparation, leave the yogurt to cool in the refrigerator.

Type of heating used:
- Top/bottom heating

Dish	Cookware	Shelf position	Type of heating	Temperature in °C	Cooking time in hours
Yoghurt	individual moulds	cooking compartment floor		40-45	8-9

Save energy with Eco heating types

When cooking food, you can save energy using the energy-efficient heating types "Hotair Eco" and "Top/bottom heating Eco".

Place the food into the empty cooking compartment before it has heated up. Otherwise, energy optimisation will not have any effect. Always keep the appliance door closed when cooking.

Remove unused accessories from the cooking compartment. This will allow you to achieve ideal cooking results and save energy.

Only use original accessories supplied with your appliance. These have been tailored to the cooking compartment and the operating modes of your appliance.

Accessories

Ensure that you always use suitable accessories and that they are placed in the oven the right way around.

Wire rack
Slide the wire rack in with the imprint "Microwave" facing the appliance door, and the outer rail facing downwards.

Universal pan or baking tray
Slide the universal pan or the baking tray in carefully as far as the limit stop with the bevelled edge facing the appliance door.

Baking tins and cookware
Dark- coloured metal baking tins are most suitable.

These allow you to make energy savings of up to 35 per cent.

Cookware made from stainless steel or aluminium reflects heat like a mirror. Non-reflective cookware made from enamel, heat-resistant glass or coated, die-cast aluminium is more suitable.

Tinplate baking tins, ceramic dishes or glass dishes prolong baking time, and the cake will not brown so evenly.

Greaseproof paper
Only use greaseproof paper that is suitable for the selected temperature. Always cut greaseproof paper to size.

Recommended setting values

Here, you can find specifications for various dishes. The temperature and baking time are dependent on the quantity and composition of the dough. Different settings ranges are indicated for this reason. Try using the lower values at first. A lower temperature results in more even browning. If necessary, use a higher setting the next time.

Note: Baking times can not be reduced by using higher temperatures. Cakes or baked items would only be cooked on the outside, but would not be cooked completely in the middle.

Types of heating used:
- Hotair Eco
- Top/bottom heating Eco

Dish	Accessories/cookware	Shelf position	Type of heating	Temperature in °C	Cooking time in mins.
Baking					
Victoria sponge cake	2x Ø20 cm tins	1		170-180	30-40
Light fruit cake	high Ø20 cm tin	1		150-170	70-90
Rich Fruit Cake	high Ø23 cm tin	1		140-160	120-180
Fruit crumble	flat glass dish	1		160-180	40-60
Sponge cake (fatless), 3 eggs	springform cake tin, Ø26 cm	1		160-170	25-35
Swiss Roll	swiss roll tin	1		180-200	10-20
Fruit Pie	plate Ø20 cm or pie tin	1		170-190	60-75
Quiche	quiche tin (dark coated)	1		190-210	35-45
(White) Bread	loaf tin (1x 900 g or 2x 450 g)	1		190-200	45-55
Scones	baking tray	1		190-210	15-20
Biscuits	baking tray	2		140-160	15-30
Jam tarts	12-cup-tin	1		170-190	15-30
Soufflé	1,2 L-soufflé dish	1		160-170	40-50
Meat Pie	rectangular pie tin	1		190-210	40-55
Jacket potatoes	baking tray	2		150-170	60-90
Meat					
Beef, slow roast joint	wire rack	1		140+150	35+40
Casserole					
Diced meat (beef, pork, lamb), 500 g meat	cookware, covered	1		140	100-120
Braising steak	cookware, covered	1		140	65+60

Dish	Accessories/cookware	Shelf position	Type of heating	Temperature in °C	Cooking time in mins.
Fish					
Fish, braised, whole 300 g, e.g. trout	cookware, covered	1	eco	190-210	25-35
Fish, braised, whole 1,5 kg, e.g. salmon	cookware, covered	1	eco	190-210	45-55
Fish fillet, plain, braised, 100 g	cookware, covered	1	eco	190-210	15-35

Acrylamide in foodstuffs

Acrylamide is mainly produced in grain and potato products prepared at high temperatures, such as potato crisps, chips, sliced bread, bread rolls, bread or fine baked goods (biscuits, gingerbread, spiced biscuit).

Tips for keeping acrylamide to a minimum	
General	■ Keep cooking times as short as possible. ■ Cook food until it is golden brown, but not too dark. ■ Large, thick pieces of food contain less acrylamide.
Baking	With top/bottom heating at max. 200 °C. With hot air at max. 180 °C.
Biscuits	With top/bottom heating at max. 190 °C. With hot air at max. 170 °C. Egg or egg yolk reduces the production of acrylamide.
Oven chips	Spread out a single layer evenly on the baking tray. Cook at least 400 g at once on a baking tray so that the chips do not dry out.

Slow cook

Slow cooking is a technique for cooking food over a long period at low temperatures. For this reason, it is also called "low-temperature cooking".

Slow cooking is ideal for all prime cuts (e.g. tender portions of beef, veal, pork, lamb or poultry) which are to be cooked "à point". The meat will remain succulent and tender.

The benefit of this cooking method is that it allows lots of scope for menu planning because slow-cooked meat is easy to keep warm. You do not have to turn the meat when cooking. Keep the appliance door closed in order to maintain an even cooking climate.

Only use fresh, clean and hygienic meat without bones. Carefully remove sinews and fat from around the edge. Fat develops a strong, distinct flavour during slow cooking. You can also use seasoned or marinated meat. Do not use defrosted meat.

Meat can be carved immediately following slow cooking. No standing time is required. Due to the special cooking method, the meat looks pink, but is not raw or undercooked.

Note: Delayed-start operation with an end time is not possible for the slow cooking heating type.

Cookware

Use flat cookware, e.g. a glass/porcelain serving dish. Place the cookware into the cooking compartment to preheat it.

Always place the uncovered cookware onto the wire rack at level 1.

You can find additional information in the tips on slow cooking attached to the settings table.

Your appliance features the heating type "Slow cook". Only start operation when the cooking compartment has fully cooled down. Allow the cooking compartment to warm up for around 10 minutes with the cookware inside.

Sear the meat on the hotplate at a very high heat and for a sufficiently long time on all sides, even on the ends. Place into the preheated cookware right away. Place the cookware containing the meat into the cooking compartment once again and cook slowly.

Recommended setting values

The slow cooking temperature and cooking time are dependent on the size, thickness and quality of the meat. Different settings ranges are indicated for this reason.

Type of heating used:
- Slow cooking

Dish	Cookware	Shelf position	Type of heating	Searing time in mins.	Temperature in °C	Cooking time in mins.
Poultry						
Duck breast, 400 g	Cookware, uncovered	1		6-8	90*	45-60
Chicken breast fillet, 200 g each	Cookware, uncovered	1		5-7	90*	45-60
Turkey breast, boned, 1 kg	Cookware, uncovered	1		8-10	90*	120-150
Pork						
Pork tenderloin steak, 5-6 cm thick, 1.5 kg	Cookware, uncovered	1		8-10	85*	210-240
Fillet of pork, whole	Cookware, uncovered	1		6-8	85*	60-90
Pork medallions, 4 cm thick	Cookware, uncovered	1		5-7	85*	90-120
Beef						
Joint of beef (rump), 6-7 cm thick, 1.5 kg	Cookware, uncovered	1		8-10	85*	240-300
Beef tenderloin, whole, 1 kg	Cookware, uncovered	1		4-6	85*	120-180
Sirloin, 5-6 cm thick	Cookware, uncovered	1		6-8	85*	210-270
Beef medallions/rump steak, 4 cm thick	Cookware, uncovered	1		5-7	85*	60-120
Veal						
Joint of veal, 4-5 cm thick, 1.5 kg	Cookware, uncovered	1		8-10	85*	180-240
Joint of veal, 10-15 cm thick, 1.5 kg	Cookware, uncovered	1		8-10	85*	240-300
Veal fillet, whole, 800 g	Cookware, uncovered	1		5-7	85*	150-210
Veal medallions, 4 cm thick	Cookware, uncovered	1		5-7	85*	90-120
Lamb						
Saddle of lamb, boneless, 200 g each	Cookware, uncovered	1		5-7	85*	45-75
Leg of lamb, boned, medium, 1 kg, tied	Cookware, uncovered	1		6-8	85*	180-240

* Preheat

Tips for slow cooking

Slow-cooking duck breast.	Place the cold duck breast into a pan and fry the skin side first. After slow cooking, grill for 3 to 5 minutes until crispy.
The slow-cooked meat is not as hot as conventionally roasted meat.	So that the roasted meat does not cool so quickly, warm the plates and serve the sauces very hot.

Drying

With 4D hot air, you can dry foods with outstanding results. With this type of preserving, flavourings are concentrated by the dehydration.

Only use unblemished fruit, vegetables and herbs and wash them thoroughly. Line the wire rack with greaseproof paper or parchment paper. Drain the excess water from the fruit and dry it.

If necessary, cut it into equal chunks or thin slices. Place unpeeled fruit onto the dish with the sliced surfaces facing upwards. Ensure that neither fruit nor mushrooms overlap on the wire rack.

Grate vegetables and then blanch them. Allow the blanched vegetables to drain off and distribute them evenly on the wire rack.

Dry herbs on the stem. Position the herbs evenly and slightly heaped on the wire rack.

Use the following shelf positions for drying:
- 1 wire rack: Level 2
- 2 wire racks: Level 3+1

Turn very juicy fruit and vegetables several times. After drying, remove the dried products from the paper immediately.

Recommended setting values

In the table, you can find settings for drying various foodstuffs. The temperature and cooking time are dependent on the type, moisture, ripeness and thickness of the food to be dried. The longer you leave the food to be dried, the better it will be preserved. The thinner the slices are, the quicker the drying process will be and the more aromatic the dried food will remain. Setting ranges are indicated for this reason.

If you wish to dry additional foodstuffs, you should use similar foodstuffs in the table as a reference.

Type of heating used:
- 4D hot air

Dish	Accessories	Shelf position	Type of heating	Temperature in °C	Cooking time in hours
Pomes (apple rings, 3 mm thick, 200 g per wire rack)	Wire rack	2		80	4-7
Stone fruit (plums)	Wire rack	2		80	8-10
Root vegetables (carrots), grated, blanched	Wire rack	2		80	4-7
Sliced mushrooms	Wire rack	2		60	6-8
Herbs, washed	1-2 wire racks	-		60	2-6

Preserving

You can preserve fruit and vegetables using your appliance.

⚠ Warning – Risk of injury!
If the food is preserved incorrectly, the preserving jars may burst. Follow the instructions for preserving.

Jars

Use only clean and undamaged preserving jars. Only use heat-resistant, clean and undamaged rubber rings. Check clips and clamps in advance.

For each preserving process, only use preserving jars that are the same size and contain the same food. In the cooking compartment, you can preserve the contents of a maximum of six ½, 1 or 1½-litre preserving jars at the same time. Do not use jars that are larger or taller than this. The lids could rupture.

Preserving jars must not touch one another in the cooking compartment during the preserving process.

Preparing fruit and vegetables

Only use fruit and vegetables that are in good condition. Wash them thoroughly.

Peel, core and chop fruit and vegetables appropriate to their type and fill the preserving jars with them up to approx. 2 cm below the rim.

Fruit
Fill the preserving jars with the fruit along with a hot, skimmed sugar solution (approx. 400 ml for a 1-litre jar). For one litre of water:
- Approx. 250 g sugar for sweet fruit
- Approx. 500 g sugar for sour fruit

Vegetables
Fill the jars with the vegetables along with hot, boiled water.

Wipe the rims of the jars, as they must be clean. Place a damp rubber ring and a lid on each jar. Seal the jars with clamps. Place the jars into the universal pan so that they do not touch each other. Pour 500 ml hot water (approx. 80 °C) into the universal pan. Use the settings indicated in the table.

Ending the preserving process

Fruit
After a short while, small bubbles will form at short intervals. Switch off the appliance once all preserving jars are bubbling. Remove the jars from the cooking compartment after the indicated cooling time.

Vegetables
After a short while, small bubbles will form at short intervals. As soon as all preserving jars are bubbling, reduce the temperature to 120 °C and allow the jars to continue to bubble in the closed cooking compartment as indicated in the table. After this time has elapsed, switch off the appliance and make use of the residual heat for several minutes as indicated in the table.

After preserving, remove the jars from the cooking compartment and place them onto a clean cloth. Do not place these hot jars onto a cold or damp surface, as they may crack. Cover the preserving jars to protect them from draughts. Only remove the clamps once the jars are cold.

Recommended setting values

The indicated times in the settings table are average values for preserving fruit and vegetables. They may be influenced by room temperature, the number of jars, quantity, heat and quality of the jar contents. The specifications are based on 1-litre round jars. Before you switch off the appliance or change the cooking mode, check whether the contents of the jars are bubbling as they should. The bubbling process starts after approx. 30-60 minutes.

Type of heating used:
- 4D hot air

Dish	Cookware	Shelf position	Type of heating	Temperature in °C	Cooking time in mins.
Preserving					
Vegetables, e.g. carrots	1-litre preserving jars	1		160-170	Before it starts bubbling: 30-40
				120	When it starts to bubble: 30-40
				-	Residual heat: 30
Vegetables, e.g. cucumbers	1-litre preserving jars	1		160-170	Before it starts bubbling: 30-40
				-	Residual heat: 30
Stone fruit, e.g. cherries, damsons	1-litre preserving jars	1		160-170	Before it starts bubbling: 30-40
				-	Residual heat: 35
Pomes, e.g. apples, strawberries	1-litre preserving jars	1		160-170	Before it starts bubbling: 30-40
				-	Residual heat: 25

Prove dough

You can prove yeast dough in your appliance more quickly than at room temperature. Use the top/bottom heating type. Only start operation when the cooking compartment has fully cooled down.

Always allow yeast dough to prove twice. Observe the specifications in the settings tables for the 1st and 2nd proving processes (dough fermentation and final fermentation).

Dough fermentation
Use the settings indicated in the table and heat up the appliance. Position the dough bowl on the wire rack.

Do not open the appliance door during the proving process, as moisture will escape. Cover the dough with a damp cloth.

Final fermentation
Place your baked item into the oven at the shelf position indicated in the table.

If you want to preheat the oven, the final fermentation takes place outside the appliance in a warm place.

Recommended setting values

The temperature and proving time are dependent on the type and quantity of the ingredients. The values in the table are therefore only meant to be average values.

Type of heating used:
- Top/bottom heating

Dish	Accessories/cookware	Shelf position	Type of heating	Temperature in °C	Cooking time in mins.
Yeast dough, light	Bowl	1		35-40	25-30
	Baking tray	1		35-40	10-20
Yeast dough, heavy and rich	Bowl	1		35-40	20-40
	Baking tray	1		35-40	15-25

Defrosting

Use the "Microwave" operation mode to defrost frozen fruit, vegetables, poultry, meat, fish and baked items.

Remove the frozen food from its packaging and place it onto the wire rack in cookware suitable for microwave use. Observe the notes on cookware suitable for microwaves. → *"Microwave" on page 19*

Slide the wire rack in with the imprint "Microwave" facing the appliance door and the outer rail facing downwards.

Remove unused accessories from the cooking compartment. This will allow you to achieve optimum cooking results and save energy.

Recommended setting values

The times in the table are average values. They are dependent on the quality, freezing temperature (-18 °C) and composition of the food. Time ranges are indicated. Set the shortest time first and then extend the time if necessary. You can often achieve better results when defrosting in several steps. These are indicated one below the other in the table.

Tip: Items which were frozen flat or portioned defrost faster than those frozen in a block.

Stir the food or turn it once or twice in between. Large pieces of food should be turned several times. Occasionally split the food or remove items which have already defrosted from the cooking compartment.

Leave the defrosted food to rest for another 10 to 30 minutes in the appliance whilst it is switched off, so that the temperature balances out.

Tip: If you have quantities other than those indicated in the settings table, this basic rule will help: double the quantity equates to roughly double the cooking time.

Type of heating used:
- Microwave

Dish	Accessories/cookware	Shelf position	Type of heating	MW power in watts	Cooking time in mins.
Bread, bread rolls					
Bread, 500 g	Cookware, uncovered	1		180	3
				90	10-15
Bread rolls	Wire rack	1		180	5-10
				90	5-10
Cake					
Cake, moist, 500 g	Cookware, uncovered	1		180	5
				90	15-20
Cake, dry, 750 g*	Cookware, uncovered	1		180	2
				90	10-15
Meat and poultry					
Chicken, whole, 1.2 kg*	Cookware, uncovered	1		180	10
				90	10-15
Poultry portions, 250 g*	Cookware, uncovered	1		180	3
				90	5-10
Duck, 2 kg*	Cookware, uncovered	1		180	10
				90	30-40
Whole pieces of meat, e.g. joint (raw meat), 800 g	Cookware, uncovered	1		180	15
				90	10-15
Whole pieces of meat, e.g. joint (raw meat), 1 kg*	Cookware, uncovered	1		180	15
				90	20-30
Whole pieces of meat, e.g. joint (raw meat), 1.5 kg*	Cookware, uncovered	1		180	15
				90	25-35
Meat, in pieces or slices, e.g. goulash (raw meat), 500 g*	Cookware, uncovered	1		180	8
				90	5-10
Minced meat, mixed, 200 g*	Cookware, uncovered	1		90	8-15
Minced meat, mixed, 500 g*	Cookware, uncovered	1		180	5
				90	10-15
Minced meat, mixed, 800 g*	Cookware, uncovered	1		180	10
				90	15-20
Fish					
Fish, whole, 300 g*	Cookware, uncovered	1		180	3
				90	10-15
Fish fillet, 400 g*	Cookware, uncovered	1		180	5
				90	10-15

* Turn halfway through cooking time

Dish	Accessories/cookware	Shelf position	Type of heating	MW power in watts	Cooking time in mins.
Fruit, vegetables					
Berries, 300 g	Cookware, uncovered	1		180	5-10
Vegetables, 600 g	Cookware, uncovered	1		180	10
				90	8-13
Miscellaneous					
Defrosting butter, 125 g	Cookware, uncovered	1		90	7-9
* Turn halfway through cooking time					

Heating food in a microwave

Using the microwave, you can heat food, or defrost and heat it in a single step.

Take ready-to-eat meals out of the packaging. The food will heat up more quickly and evenly in cookware that is suitable for microwaves. The various components of a dish may require different times to heat up.

Food which lies flat will cook more quickly than food which is piled high. Arrange the food as flat as possible in the cookware for this reason. Food should not be vertically stacked.

Cover the food. This will ensure better cooking results. If you do not have a lid that fits your cookware, use a plate or microwave film for this purpose.

Stir food two to three times during cooking and turn it if necessary. After heating food up, leave it to rest for 1 to 2 minutes to compensate for the temperature difference.

If you are heating up baby food, place the bottle onto the wire rack without the teat or the lid. After heating up, shake well or stir and be sure to check the temperature.

The food transfers heat to the cookware. It can become very hot when only using the microwave for preparation.

Tip: If you have quantities other than those indicated in the settings table, this basic rule will help: double the quantity equates to roughly double the cooking time.

⚠ Warning – Risk of scalding!
There is a possibility of delayed boiling when a liquid is heated. This means that the liquid reaches boiling temperature without the usual steam bubbles rising to the surface. Even if the container only vibrates a little, the hot liquid may suddenly boil over and spatter. When heating, always place a spoon in the container. This will prevent delayed boiling.

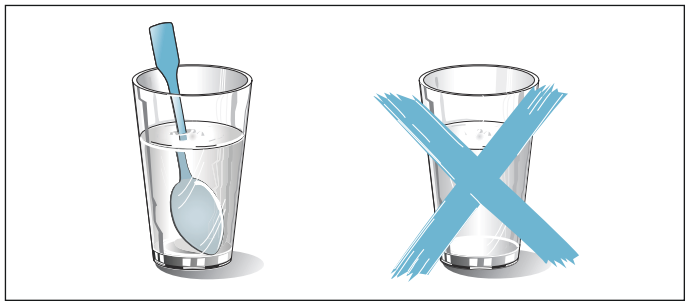

Caution!
Creation of sparks: Metal – e.g. a spoon in a glass – must be kept at least 2 cm from the cooking compartment walls and the inside of the door. Sparks can irreparably damage the glass on the inside of the door.

Recommended setting values

In the table, you can find the setting values for heating various drinks and foodstuffs up in the microwave. The times specified are only average values. These depend on the cookware used, the quality, temperature and composition of the food in question. Time ranges are indicated. Set the shortest time first and then extend the time if necessary.

The values in the table apply to food placed into a cold cooking compartment.

If no values are indicated for your food, use similar foods in the table as orientation.

Remove any accessories from the cooking compartment which are not being used. This will ensure optimum cooking results and will also save energy.

Wipe the cooking compartment clean after cooking.

Type of heating used:
- Microwave

Dish	Cookware	Shelf position	Type of heating	MW power in watts	Cooking time in mins.
Heating drinks					
200 ml (stir well)	Cookware, uncovered	1		1000	1-3
400 ml (stir well)	Cookware, uncovered	1		1000	2-6

Dish	Cookware	Shelf position	Type of heating	MW power in watts	Cooking time in mins.
Heating baby food					
Baby bottles, 150 ml (stir well)	Cookware, uncovered	1		360	1-3
Vegetables, chilled					
250 g	Cookware, covered	1		600	3-8
Vegetables, frozen					
loose, 250 g	Cookware, covered	1		600	8-12
Creamed spinach, frozen block, 450 g	Cookware, covered	1		600	11-16
Dishes, chilled					
Plated meal, 1 portion	Cookware, covered	1		600	4-8
Soup, stew, 400 ml	Cookware, covered	1		600	5-7
Side dishes, e.g. pasta, dumplings, potatoes, rice	Cookware, covered	1		600	5-10
Bakes, 400 g, e.g. lasagne, potato gratin	Cookware, uncovered	1		600	5-10
Dishes, frozen					
Plated meal, 1 portion	Cookware, covered	1		600	11-15
Soup, stew, 200 ml (stir well)	Cookware, covered	1		1000	2-4
Side dishes, 500 g, e.g. pasta, dumplings, potatoes, rice	Cookware, covered	1		600	7-10
Bakes, 400 g, e.g. lasagne, potato gratin	Cookware, covered	1		600	11-15

Keeping warm

You can keep cooked dishes warm using the "Keeping warm" heating type. This will avoid condensation developing, and means you will not have to wipe out the cooking compartment.

Do not keep cooked dishes warm for longer than two hours. Be aware that some dishes may continue cooking whilst being kept warm. Cover the dishes if necessary.

Test dishes

These tables have been produced for test institutes to facilitate the inspection of the appliance.

As per EN 60350-1:2013 and IEC 60350-1:2011 and as per standard EN 60705:2012, IEC 60705:2010.

Baking

Baked items that are placed into the oven on trays or in baking tins/dishes at the same time will not necessarily be ready at the same time.

Shelf positions for baking on two levels:
- Universal pan: Level 3
  Baking tray: Level 1

Apple pie
Apple pie on one level: place dark-coloured springform cake tins diagonally next to each other.

Cakes in tinplate springform cake tins: bake on one level with top/bottom heating. Place the springform cake tin onto the universal pan instead of onto the wire rack.

Fatless sponge cake
Fatless sponge cake on two levels: vertically stack springform cake tins in an offset manner on the wire racks.

Notes

- The setting values apply to dishes placed into a cold cooking compartment.
- Please note the information in the tables about preheating. The setting values are valid without rapid heating-up.
- For baking, use the lower of the indicated temperatures first.

Types of heating used:
- 4D hot air
- Top/bottom heating
- Pizza setting

Dish	Accessories/cookware	Shelf position	Type of heating	Temperature in °C	Cooking time in mins.
Baking					
Shortbread	Baking tray	1		150-160*	20-30
Shortbread	Baking tray	1		140-150*	25-35
Small cakes	Baking tray	1		160*	25-35
Small cakes	Baking tray	1		150*	20-30
Small cakes, 2 levels	Universal pan + baking tray	3+1		140*	30-40
Fatless sponge cake	Springform cake tin, diameter 26 cm	1		160-170**	25-35
Fatless sponge cake	Springform cake tin, diameter 26 cm	1		160-170**	30-45
Apple pie	2 x black plate tins, diameter 20 cm	1		180-200	60-70
Apple pie	2 x black plate tins, diameter 20 cm	1		170-180	60-80

* Preheat for 5 mins, do not use quick heat function
** Preheat, do not use quick heat function

Grilling

Also slide in the universal pan. The liquid will be caught and the cooking compartment stays cleaner.

Type of heating used:
- Grill, large area

Dish	Accessories	Shelf position	Type of heating	Grill setting	Cooking time in mins.
Grilling					
Browning toast	Wire rack	3		3	2-6
Beefburgers, x 12*	Wire rack	2		3	20-30

* Turn after 2/3 of the total time

Preparing food with a microwave

When preparing food in a microwave, always use cookware which is heat-resistant and suitable for microwave use. Observe the notes on cookware suitable for microwaves. ⟶ *"Microwave" on page 19*

If you place your cookware onto the wire rack, slide the wire rack in with the imprint "Microwave" facing the appliance door and the outer rail facing downwards.

Types of heating used:
- 4D hot air
- Circulated air grilling
- Microwave

Dish	Accessories/cookware	Shelf position	Type of heating	Temperature in °C	MW power in watts	Cooking time in mins.
Microwave defrosting						
Meat	Cookware, uncovered	1		-	180	5
					90	10-15
Microwave cooking						
Egg wash	Cookware, uncovered	1		-	360	20
					180	20-25
Sponge flan	Cookware, uncovered	1		-	600	7-9
Meat loaf	Cookware, uncovered	1		-	600	22-27
Combined microwave cooking						
Potato gratin	Cookware, uncovered	1		150-170	360	25-30
Cake	Cookware, uncovered	1		190-210	180	12-18
Chicken*	Cookware, uncovered	1		180-200	360	25-35

* Turn after 2/3 of the total time

Robert Bosch Hausgeräte GmbH
Carl-Wery-Straße 34
81739 München, GERMANY

www.bosch-home.com

9001157430
951109