BOSCH

**Register** your new device on MyBosch now and get free benefits:
**bosch-home.com/welcome**

MyBosch

# Built-in oven

**HBG5585.0B**

**[en]** Instruction manual Built-in oven

# Table of contents


**Intended use . . . . 4**

**Important safety information . . . . 4**
General information . . . . 4
Halogen lamp. . . . . 5
Meat thermometer . . . . 5
Cleaning function . . . . 5

**Causes of damage . . . . 6**
General information . . . . 6

**Environmental protection . . . . 6**
Saving energy . . . . 6
Environmentally-friendly disposal . . . . 7

**Getting to know your appliance . . . . 8**
Control panel . . . . 8
Buttons and display . . . . 8
Types of heating and functions . . . . 9
Temperature. . . . . 10
Cooking compartment . . . . 10

**Accessories . . . . 11**
Control accessories . . . . 11
Inserting accessories . . . . 11
Optional accessories . . . . 12

**Before using for the first time. . . . . 13**
Initial use . . . . 13
Cleaning the cooking compartment and accessories 13

**Operating the appliance . . . . 13**
Switching the appliance on and off . . . . 13
Setting the heating function and temperature . . . . 13
Rapid heating. . . . . 14

**Time-setting options . . . . 14**
Setting the cooking time . . . . 14
Setting the end time. . . . . 15
Setting the timer. . . . . 15
Setting the time . . . . 16

**Meat thermometer . . . . 16**
Types of heating. . . . . 16
Inserting the meat probe into the food. . . . . 16
Setting the core temperature . . . . 17
Core temperatures of different foods . . . . 17

**Childproof lock. . . . . 18**
Activating and deactivating . . . . 18

**Basic settings. . . . . 18**
List of basic settings . . . . 18
Changing the basic settings. . . . . 19

**Sabbath mode . . . . 19**
Starting Sabbath mode. . . . . 19

**Cleaning . . . . 20**
Suitable cleaning agents . . . . 20
Surfaces in the cooking compartment . . . . 21
Keeping the appliance clean . . . . 21

**Cleaning function. . . . . 22**
Cleaning recommendation . . . . 22
Prior to initiating the cleaning function . . . . 22
Setting the cleaning function . . . . 22
Once the cleaning function has ended. . . . . 22

**Rails. . . . . 23**
Detaching and refitting the rails . . . . 23
Fitting and removing the pull-out rails. . . . . 23

**Appliance door. . . . . 25**
Removing and installing the door panels . . . . 25

**Trouble shooting . . . . 26**
Rectifying faults yourself. . . . . 26
Maximum operating time . . . . 27
Replacing the bulb in the top of the cooking compartment . . . . 27

**Customer service. . . . . 28**
E number and FD number . . . . 28

**Programmes . . . . 28**
Cookware . . . . 28
Preparing food . . . . 28
Programmes. . . . . 29
Setting a programme . . . . 31

**Tested for you in our cooking studio. . . . . 31**
General information . . . . 31
Baking . . . . 32
Roasting, braising and grilling . . . . 34
Ready meals. . . . . 37
Desserts . . . . 38
Acrylamide in foodstuffs . . . . 39
Drying. . . . . 39
Preserving . . . . 39
Prove dough. . . . . 40
Defrosting. . . . . 41
Keeping warm . . . . 41
Test dishes . . . . 42


Additional information on products, accessories, replacement parts and services can be found at **www.bosch-home.com** and in the online shop **www.bosch-eshop.com**

# Intended use

Read these instructions carefully. Only then will you be able to operate your appliance safely and correctly. Retain the instruction manual and installation instructions for future use or for subsequent owners.

This appliance is only intended to be fully fitted in a kitchen. Observe the special installation instructions.

Check the appliance for damage after unpacking it. Do not connect the appliance if it has been damaged in transport.

Only a licensed professional may connect appliances without plugs. Damage caused by incorrect connection is not covered under warranty.

This appliance is intended for domestic use only. The appliance must only be used for the preparation of food and drink. The appliance must be supervised during operation. Only use this appliance indoors.

This appliance is intended for use up to a maximum height of 4000 metres above sea level.

This appliance may be used by children over the age of 8 years old and by persons with reduced physical, sensory or mental capabilities or by persons with a lack of experience or knowledge if they are supervised or are instructed by a person responsible for their safety how to use the appliance safely and have understood the associated hazards.

Children must not play with, on, or around the appliance. Children must not clean the appliance or carry out general maintenance unless they are at least 15 years old and are being supervised.

Keep children below the age of 8 years old at a safe distance from the appliance and power cable.

Always slide accessories into the cooking compartment the right way round.
→ *"Accessories" on page 11*

# Important safety information

## General information

**⚠ Warning – Risk of fire!**

- Combustible items stored in the cooking compartment may catch fire. Never store combustible items in the cooking compartment. Never open the appliance door if there is smoke inside. Switch off the appliance and unplug it from the mains or switch off the circuit breaker in the fuse box.
- Loose food remnants, fat and meat juices may catch fire. Before using the appliance, remove the worst of the food remnants from the cooking compartment, heating elements and accessories.
- A draught is created when the appliance door is opened. Greaseproof paper may come into contact with the heating element and catch fire. Do not place greaseproof paper loosely over accessories during preheating. Always weight down the greaseproof paper with a dish or a baking tin. Only cover the surface required with greaseproof paper. Greaseproof paper must not protrude over the accessories.

**⚠ Warning – Risk of burns!**

- The appliance becomes very hot. Never touch the interior surfaces of the cooking compartment or the heating elements. Always allow the appliance to cool down. Keep children at a safe distance.
- Accessories and ovenware become very hot. Always use oven gloves to remove accessories or ovenware from the cooking compartment.
- Alcoholic vapours may catch fire in the hot cooking compartment. Never prepare food containing large quantities of drinks with a high alcohol content. Only use small quantities of drinks with a high alcohol content. Open the appliance door with care.

**⚠ Warning – Risk of scalding!**

- The accessible parts become hot during operation. Never touch the hot parts. Keep children at a safe distance.
- When you open the appliance door, hot steam can escape. Steam may not be visible, depending on its temperature. When opening, do not stand too close to the appliance. Open the appliance door carefully. Keep children away.

- Water in a hot cooking compartment may create hot steam. Never pour water into the hot cooking compartment.

**⚠ Warning – Risk of injury!**

- Scratched glass in the appliance door may develop into a crack. Do not use a glass scraper, sharp or abrasive cleaning aids or detergents.
- The hinges on the appliance door move when opening and closing the door, and you may be trapped. Keep your hands away from the hinges.

**⚠ Warning – Risk of electric shock!**

- Incorrect repairs are dangerous. Repairs may only be carried out and damaged power cables replaced by one of our trained after-sales technicians. If the appliance is defective, unplug the appliance from the mains or switch off the circuit breaker in the fuse box. Contact the after-sales service.
- The cable insulation on electrical appliances may melt when touching hot parts of the appliance. Never bring electrical appliance cables into contact with hot parts of the appliance.
- Do not use any high-pressure cleaners or steam cleaners, which can result in an electric shock.
- A defective appliance may cause electric shock. Never switch on a defective appliance. Unplug the appliance from the mains or switch off the circuit breaker in the fuse box. Contact the after-sales service.

**⚠ Warning – Hazard due to magnetism!**

Permanent magnets are used in the control panel or in the control elements. They may affect electronic implants, e.g. heart pacemakers or insulin pumps. Wearers of electronic implants must stay at least 10 cm away from the control panel.

## Halogen lamp

**⚠ Warning – Risk of burns!**

The bulbs in the cooking compartment become very hot. There is still a risk of burning your skin for some time after they have been switched off. Do not touch the glass cover. Avoid contact with your skin when cleaning.

**⚠ Warning – Risk of electric shock!**

When replacing the cooking compartment bulb, the bulb socket contacts are live. Before replacing the bulb, unplug the appliance from the mains or switch off the circuit breaker in the fuse box.

## Meat thermometer

**⚠ Warning – Risk of electric shock!**

The insulation of an incompatible meat thermometer may be damaged. Only use the meat thermometer which is recommended for this appliance.

## Cleaning function

**⚠ Warning – Risk of burns!**

⚠ The appliance will become very hot on the outside during the cleaning function. Never touch the appliance door. Allow the appliance to cool down. Keep children away from the appliance.

# Causes of damage

## General information

**Caution!**

- Accessories, foil, greaseproof paper or ovenware on the cooking compartment floor: do not place accessories on the cooking compartment floor. Do not cover the cooking compartment floor with any sort of foil or greaseproof paper. Do not place ovenware on the cooking compartment floor if a temperature of over 50 °C has been set. This will cause heat to accumulate. The baking and roasting times will no longer be correct and the enamel will be damaged.
- Aluminium foil: Aluminium foil in the cooking compartment must not come into contact with the door glass. This could cause permanent discolouration of the door glass.
- Water in a hot cooking compartment: do not pour water into the cooking compartment when it is hot. This will cause steam. The temperature change can cause damage to the enamel.
- Moisture in the cooking compartment: Over an extended period of time, moisture in the cooking compartment may lead to corrosion. Allow the cooking compartment to dry after use. Do not keep moist food in the closed cooking compartment for extended periods of time. Do not store food in the cooking compartment.
- Cooling with the appliance door open: Following operation at high temperatures, only allow the cooking compartment to cool down with the door closed. Do not trap anything in the appliance door. Even if the door is only left open a crack, the front of nearby furniture may become damaged over time. Only leave the cooking compartment to dry with the door open if a lot of moisture was produced whilst the oven was operating.
- Fruit juice: when baking particularly juicy fruit pies, do not pack the baking tray too generously. Fruit juice dripping from the baking tray leaves stains that cannot be removed. If possible, use the deeper universal pan.
- Extremely dirty seal: If the seal is very dirty, the appliance door will no longer close properly during operation. The fronts of adjacent units could be damaged. Always keep the seal clean.
  → *"Cleaning" on page 20*
- Appliance door as a seat, shelf or worktop: Do not sit on the appliance door, or place or hang anything on it. Do not place any cookware or accessories on the appliance door.
- Inserting accessories: depending on the appliance model, accessories can scratch the door panel when closing the appliance door. Always insert the accessories into the cooking compartment as far as they will go.
- Carrying the appliance: do not carry or hold the appliance by the door handle. The door handle cannot support the weight of the appliance and could break.

# Environmental protection

Your new appliance is particularly energy-efficient. Here you can find tips on how to save even more energy when using the appliance, and how to dispose of your appliance properly.

## Saving energy

- Only preheat the appliance if this is specified in the recipe or in the tables in the operating instructions.
- Leave frozen food to defrost before placing it in the cooking compartment.

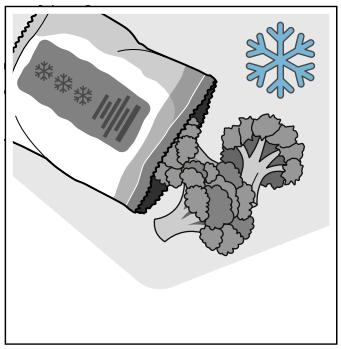

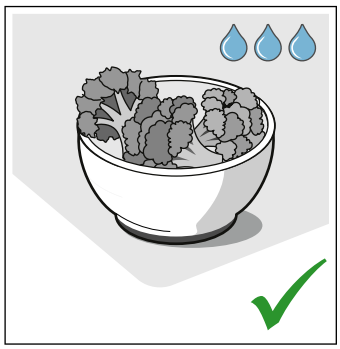

- Use baking tins that are dark-coloured, painted black or have an enamel coating. These absorb the heat particularly well.

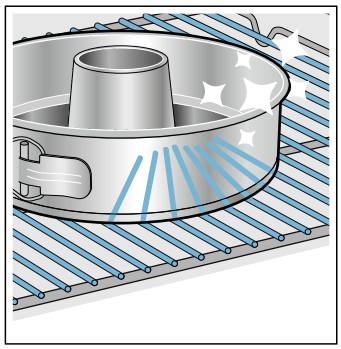

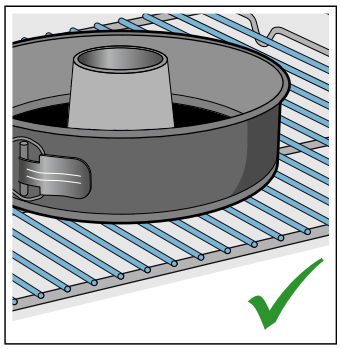

- Remove any unnecessary accessories from the cooking compartment.

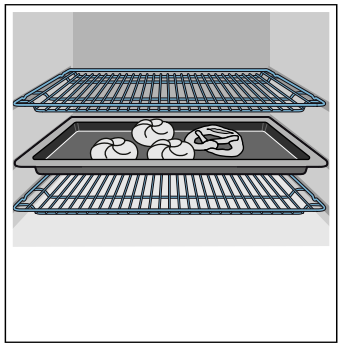

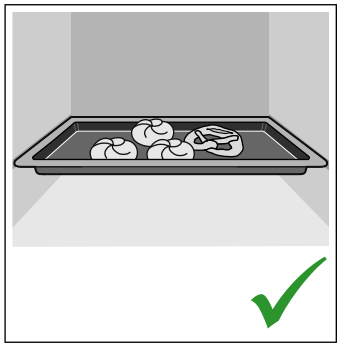

- Open the appliance door as infrequently as possible when the appliance is in use.

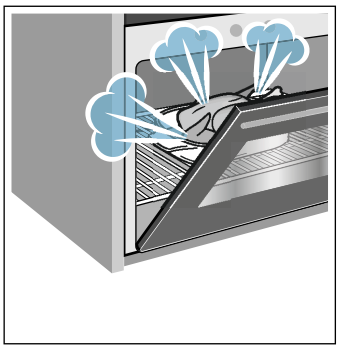

- It is best to bake several cakes one after the other. The cooking compartment stays warm. This reduces the baking time for the second cake. You can place two cake tins next to each other in the cooking compartment.

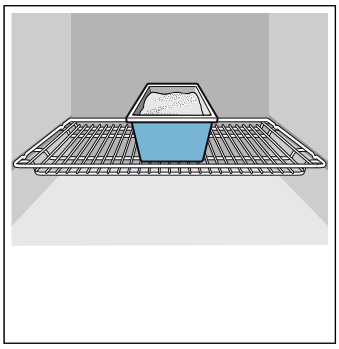

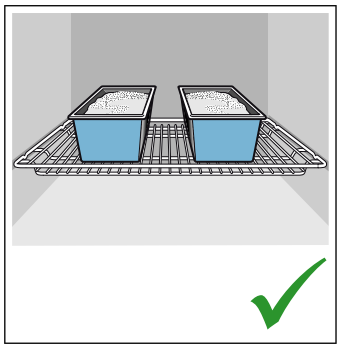

- For longer cooking times, you can switch the appliance off 10 minutes before the end of the cooking time and use the residual heat to finish cooking.

## Environmentally-friendly disposal

Dispose of packaging in an environmentally-friendly manner.

This appliance is labelled in accordance with European Directive 2012/19/EU concerning used electrical and electronic appliances (waste electrical and electronic equipment - WEEE). The guideline determines the framework for the return and recycling of used appliances as applicable throughout the EU.

# Getting to know your appliance

In this chapter, we will explain the indicators and controls. You will also find out about the various functions of your appliance.

**Note:** Depending on the appliance model, individual details and colours may differ.

## Control panel

You can set your appliance's various functions on the control panel. Below, you will see an overview of the control panel and the layout of the controls.

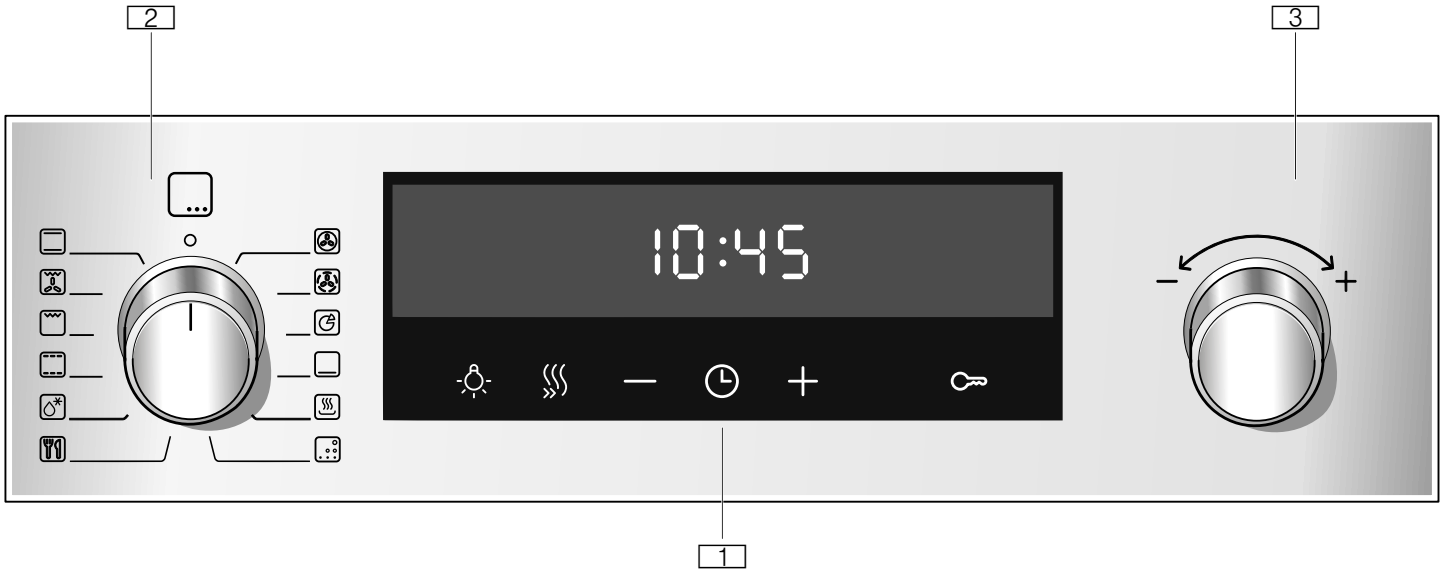


1 **Buttons and display**
The buttons are touch keys with sensors underneath. Simply touch a symbol to select the function.
The display shows symbols for active functions and the time-setting options.

2 **Function selector**
Use the function selector to set the heating function or other functions.
You can turn the function selector clockwise or anti-clockwise from the "Off" position.

3 **Temperature selector**
Use the temperature selector to set the temperature for the heating function or select the setting for other functions.
You can also turn the temperature selector clockwise or anti-clockwise. It does not have an "Off" position.

**Note:** On some appliances, the control knobs can be pushed in. To push the control knob in and engage it or to release it again, turn it to the "Off" position.

## Buttons and display

You can use the buttons to set various additional functions on your appliance. You will be able to see the values for these on the display.

| Symbol | | Meaning |
|---|---|---|
| | Time-setting options | Tap the symbol repeatedly to select the time, timer, duration and end time. |
| – | Minus | Reduce setting values. |
| + | Plus | Increase setting values. |
| | Interior lighting | Switch the interior lighting on or off. |
| | Rapid heating | Start or cancel Rapid heating for the cooking compartment. |
| | Childproof lock | Lock and unlock the oven functions on the control panel. |

### Display

The cooking compartment temperature you set using the temperature selector will be shown on the display.

In addition, you can read the settings for the time-setting options. The value that can be set at the present time or that is elapsing will be shown in large digits on the display. To use the individual time-setting options, touch the button several times.If there is a red bar above or below a symbol, this means that the value being shown in large digits on the display refers to the function that this symbol represents.

## Types of heating and functions

Use the function selector to set the types of heating and other functions.

To make sure you always use the right type of heating to cook your food, we have explained the differences and applications below.

| Type of heating | | Temperature | Use |
|---|---|---|---|
| | 3D hot air | 30-275 °C | For baking and roasting on one or more levels.<br>The fan distributes the heat from the ring heating element in the back panel evenly around the cooking compartment. |
| | Gentle hot air | 125-275 °C | For gently cooking selected types of food on one level without preheating.<br>The fan distributes the heat from the ring-shaped heating element in the back panel around the cooking compartment.<br>This heating function is used to measure both the energy consumption in air recirculation mode and the energy efficiency class. |
| | Pizza setting | 30-275 °C | For cooking pizza and dishes that require a lot of heat from underneath.<br>The bottom heating element and the ring heating element in the back panel heat up. |
| | Bottom heating | 30-250 °C | For cooking in a bain marie and for baking food for extra time.<br>Heat is emitted from below. |
| | Keep-warm | 60-100 °C | For keeping cooked food warm. |
| | Defrost | 30-60 °C | For gently defrosting frozen food. |
| | Slow cook | 70-120 °C | For gentle and slow cooking of seared, tender pieces of meat in ovenware without a lid.<br>Heat is emitted evenly from above and below at low temperatures. |
| | Grill, large area | Grill settings:<br>1 = low<br>2 = medium<br>3 = high | For grilling flat items, such as steaks or sausages, for making toast, and for browning food.<br>The whole area below the grill element becomes hot. |
| | Circulated air grilling | 30-275 °C | For roasting poultry, whole fish and larger pieces of meat.<br>The grill element and the fan switch on and off alternately. The fan circulates the hot air around the food. |
| | Top/bottom heating | 30-275 °C | For traditional baking and roasting on one level. Especially suitable for cakes with moist toppings.<br>Heat is emitted evenly from above and below.<br>This heating function is used to measure the energy consumption in the conventional mode. |

**Note:** For each heating function, the appliance specifies a default temperature or level. You can accept this value or change it in the appropriate area.

### Other functions

Your new oven has yet more functions; see below for a brief description of these.

| Function | | Use |
|---|---|---|
| | Programmes | For many types of food, the appliance has preprogrammed setting values that you can use.<br>→ *"Programmes" on page 28* |
| | EcoClean | The EcoClean cleaning function cleans the cooking compartment almost by itself.<br>→ *"Cleaning function" on page 22* |

## Temperature

Use the temperature selector to set the temperature in the cooking compartment. It can also be used to select the grill and cleaning settings, for example.

The settings will appear on the display.

### Notes

- The temperature can be set in 1 degree increments up to 100 °C, and in 5 degree increments thereafter.
- When cooking at very high temperatures, the appliance lowers the temperature slightly after an extended period.

### Temperature indicator

The line at the bottom of the display turns red from left to right as the cooking compartment heats up.

When you are preheating the appliance, the optimal time to place your food in the cooking compartment is as soon as the entire line has turned red.

**Residual heat**
When the appliance is switched off, the temperature indicator shows the residual heat in the cooking compartment. The lower the temperature drops, the shorter the line.

### Notes

- The temperature indicator only shows the increasing temperature for heating functions for which a temperature is set. For grill settings, for example, the indicator shows a full line from the beginning.
- If the temperature in the cooking compartment is too high when the appliance is started, h will appear on the display for some heating functions. Switch off the appliance and allow it to cool down before switching it back on again.
- Due to thermal inertia, the actual temperature inside the cooking compartment may differ slightly from the temperature that is displayed.

## Cooking compartment

Various functions in the cooking compartment make your appliance easier to use. For example, the cooking compartment is well lit and a cooling fan prevents the appliance from overheating.

### Opening the appliance door

If you open the appliance door when the appliance is in operation, the appliance will continue to operate as before.

### Interior lighting

With most heating functions and other functions, the interior lighting in the cooking compartment will remain lit while the oven is in operation. Once the oven has finished cooking the food, the lighting will go out.

By pressing the button for the interior lighting, you can switch on the lighting without heating the oven. This makes it easier to clean your appliance, for example.

### Cooling fan

The cooling fan switches on and off as required. The hot air escapes above the door.

### Caution!

Do not cover the ventilation slots. Otherwise, the appliance may overheat.

So that the cooking compartment cools down more quickly after operation, the cooling fan continues to run for a certain period afterwards.

# Accessories

Your appliance is accompanied by a range of accessories. Here, you can find an overview of the accessories included and information on how to use them correctly.

## Control accessories

The accessories supplied may differ depending on the appliance model.

| | |
|---|---|
| | **Wire rack**<br>For ovenware, cake tins and ovenproof dishes.<br>For roasts, grilled items and frozen meals. |
| 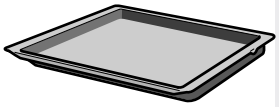 | **Universal pan**<br>For moist cakes, pastries, frozen meals and large roasts.<br>It can be used to catch dripping fat when you are grilling directly on the wire rack. |
| | Meat thermometer<br>Enables precision roasting to your exact requirements.<br>Its use is described in the relevant section. ⟶ *"Meat thermometer" on page 16* |

Only use original accessories. They are specially adapted for your appliance.

You can buy accessories from the after-sales service, from specialist retailers or online.

**Note:** The accessories may deform when they become hot. This does not affect their function. Once they have cooled down again, they regain their original shape.

## Inserting accessories

The cooking compartment has five shelf positions. The shelf positions are counted from the bottom up.

In some appliances, the highest shelf position is marked on the cooking compartment by the grill symbol.

Depending on the appliance model, your cooking compartment will have one or more pull-out rails or one or two clip-on pull-out rails. The pull-out rails are fixed in place and cannot be removed. The clip-on pull-out rails can be fitted as required to levels that are not currently being used.

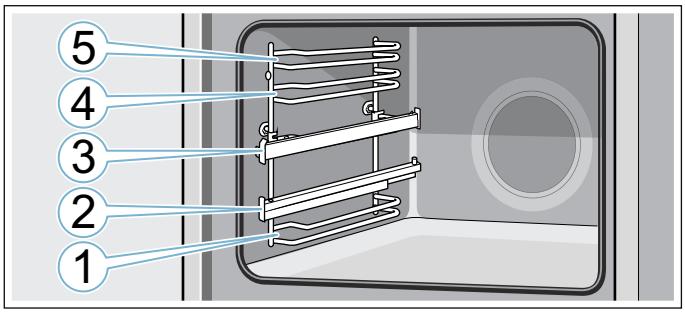


Always insert accessories between the two guide rods for the shelf position.

Accessories can be pulled out approximately halfway without tipping. You can use the pull-out rails to pull the accessories out further.

Make sure that the accessory is placed behind the lug **a** on the pull-out rail.

Example in the picture: Universal pan

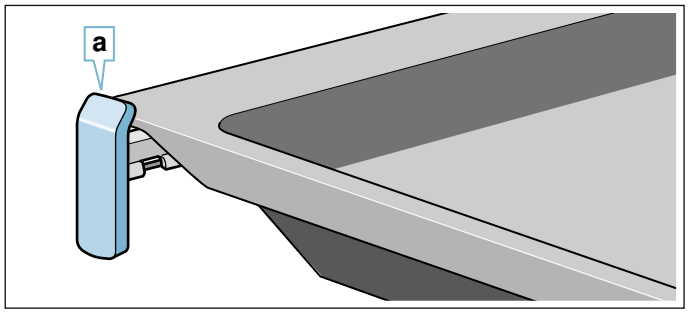


The pull-out rails lock in place when they are fully pulled out. This makes it easy to place the accessories in position. To unlock the pull-out rails, use a little force to push them back into the cooking compartment.

### Notes

- Make sure that you always insert the accessories into the cooking compartment the right way round.
- Always insert the accessories fully into the cooking compartment so that they do not touch the appliance door.
- Take any accessories that you will not be using out of the cooking compartment.
- The shelves can be taken out of the cooking compartment for cleaning. ⟶ *Page 23*

### Locking function

The accessories can be pulled out approximately halfway until they lock in place. The locking function prevents the accessories from tilting when they are pulled out. The accessories must be inserted into the cooking compartment correctly for the tilt protection to work properly.

When inserting the wire rack, ensure that lug **a** is at the rear and is facing downwards. The open side must be facing the appliance door and the outer rail must be facing downwards ⌣.

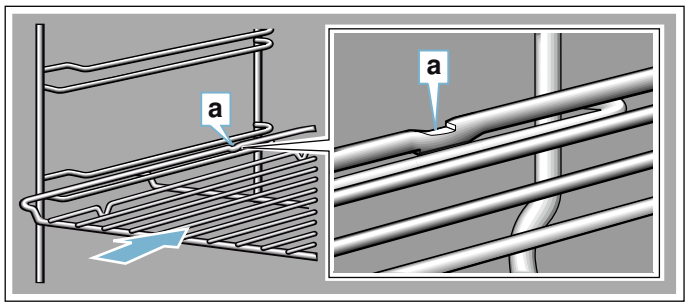


When inserting baking trays, ensure that lug **a** is at the rear and is facing downwards. The sloping edge of the accessory **b** must be facing towards the appliance door.

Example in the picture: Universal pan

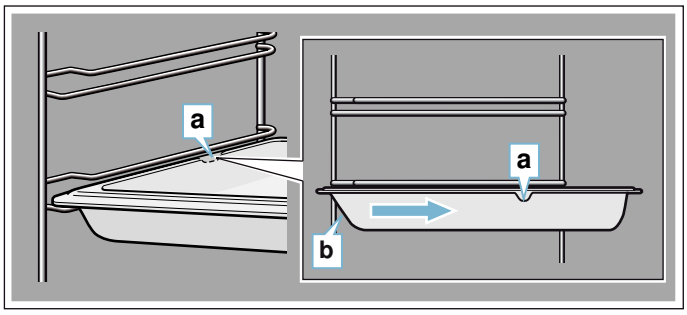


### Combining accessories

You can insert the wire rack and the universal pan at the same time to catch drops of liquid.

When inserting the wire rack, ensure that both spacers **a** are at the rear edge. When inserting the universal pan, the wire rack is on top of the upper guide rod of the shelf position.

Example in the picture: Universal pan

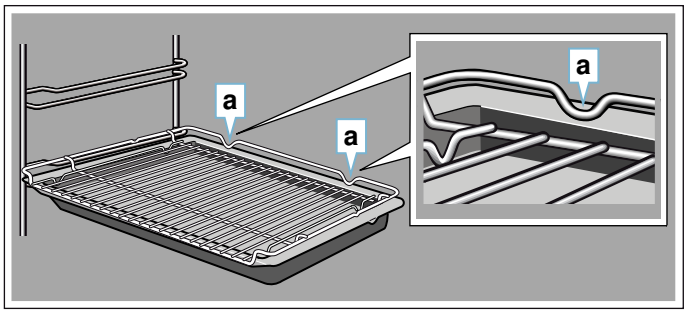


## Optional accessories

You can buy optional accessories from the after-sales service, from specialist retailers or online. *You will find a comprehensive range of products for your appliance in our brochures and online.

Both availability and whether it is possible to order online differ between countries. Please see your sales brochures for more details.

**Note:** Not all optional accessories are suitable for every appliance. When purchasing, please always quote the exact identification number (E-no.) of your appliance.
→ *"Customer service" on page 28*

| Optional accessories |
|---|
| **Wire rack**<br>For cookware, cake tins and ovenproof dishes, and for roasts and grilled food. |
| **Baking tray**<br>For tray bakes and small baked items. |
| **Universal pan**<br>For moist cakes, baked items, frozen food and large roasts.<br>It can be used to catch dripping fat when you are grilling directly on the wire rack. |
| **Wire insert**<br>For meat, poultry and fish.<br>For inserting into the universal pan to catch dripping fat and meat juices. |
| **Universal pan, non-stick**<br>For moist cakes, baked items, frozen food and large roasts.<br>Allows baked items and roasts to be removed more easily from the universal pan. |
| **Baking tray, non-stick**<br>For tray bakes and small baked items.<br>Allows baked items to be removed more easily from the baking tray. |
| **Two universal pans, narrow style**<br>For moist cakes, baked items and frozen food.<br>Do not use the universal pans in conjunction with the clip-on pull-out rails or place them on the wire rack. |
| **Professional pan**<br>For preparing large quantities of food. Also ideal for moussaka, for example. |
| **Professional pan with wire insert**<br>For preparing large quantities of food. |
| **Lid for the professional pan**<br>The lid turns the professional pan into a professional roasting dish. |
| **Pizza tray**<br>For pizzas and large round cakes. |
| **Grill tray**<br>Use for grilling in place of the wire rack or as a splatter guard. Use in the universal pan only. |
| **Baking stone**<br>For home-made bread, bread rolls and pizzas that you wish to have a crispy base.<br>The baking stone must be preheated to the recommended temperature. |
| **Glass roasting dish**<br>For stews and bakes. |
| **Glass tray**<br>For large roasts, moist cakes and bakes. |
| **Glass pan**<br>For bakes, vegetable dishes and baked items. |
| **Clip-on rail**<br>The pull-out rails can be used at any level. Rails can be fitted on any and all free levels. |
| **Pull-out system, one level**<br>Fitting pull-out rails at position 2 will allow you to pull accessories out further without them tipping. |
| **Pull-out system, two levels**<br>Fitting pull-out rails at positions 2 and 3 will allow you to pull accessories out further without them tipping. |
| **Pull-out system, three levels**<br>Fitting pull-out rails at positions 1, 2 and 3 will allow you to pull accessories out further without them tipping. |

# Before using for the first time

Before you can use your new appliance, you must make some settings. You must also clean the cooking compartment and accessories.

## Initial use

The time will appear on the display once the appliance is connected to the power supply. Set the current time.

### Setting the time

Make sure that the function selector is set to the "Off" position.

The time starts at "12:00".
1. Use the **–** or **+** button to set the time.
2. Touch the ⏲ button to confirm.

The current time will be shown on the display.

## Cleaning the cooking compartment and accessories

Before using the appliance to prepare food for the first time, you must clean the cooking compartment and accessories.

### Cleaning the cooking compartment

To eliminate the new-appliance smell, heat up the cooking compartment when it is empty and with the oven door closed.

Make sure that there is no leftover packaging, such as polystyrene pellets, in the cooking compartment and remove the adhesive tape that is in or on the appliance. Before heating the appliance, wipe the smooth surfaces in the cooking compartment with a soft, damp cloth. Keep the kitchen ventilated while the appliance is heating.

Apply the settings indicated below. You can find out how to set the heating function and the temperature in the next section. ⟶ *"Operating the appliance" on page 13*

| Settings | |
|---|---|
| Heating function | 3D Hotair |
| Temperature | maximum |
| Time | 1 hour |

Switch off the appliance after the time indicated.

Once the cooking compartment has cooled down, clean the smooth surfaces with soapy water and a dish cloth.

### Cleaning the accessories

Clean the accessories thoroughly using soapy water and a dish cloth or soft brush.

# Operating the appliance

You have already learnt about the controls and how they work. Now we will explain how to apply settings on your appliance.

## Switching the appliance on and off

Use the function selector to switch the appliance on or off. Turning the function selector to any position other than the "Off" position switches on the appliance. To switch off the appliance, always turn the function selector to the "Off" position.

## Setting the heating function and temperature

The function selector and temperature selector make it very easy to apply the settings you require to your appliance. To find out which heating function is best for which type of food, please refer to the beginning of the instruction manual.

Example in the picture: Top/bottom heating ☐ at 190 °C.
1. Use the function selector to set the heating function.

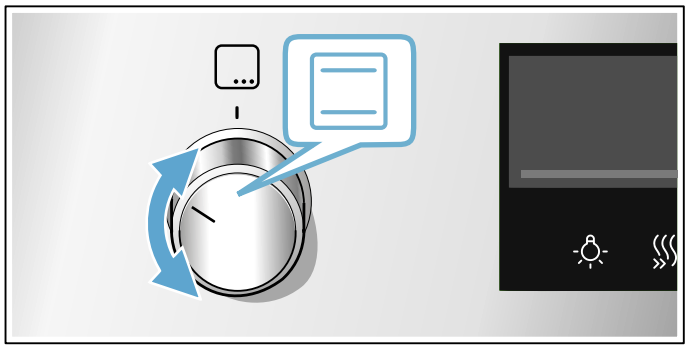

2. Use the temperature selector to set the temperature or grill setting.

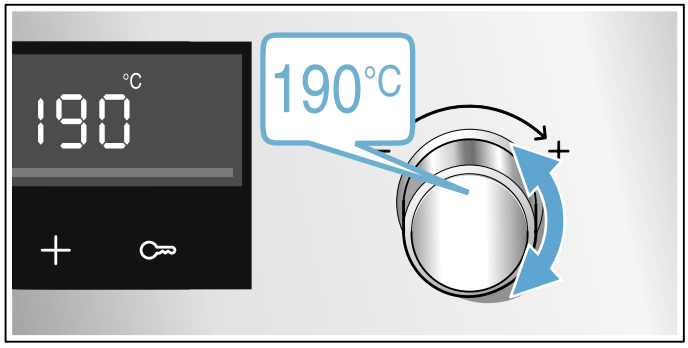


The appliance will start heating after a few seconds.

Once your food is cooked, turn the function selector to the "Off" position to switch the appliance off.

**Note:** You can set both a cooking time and an end time on the appliance. ⟶ *"Time-setting options" on page 14*

### Changing

The heating function and temperature can be changed at any time using the relevant selector.

If you change the heating function, the temperature will be changed to the corresponding default value.

## Rapid heating

With Rapid heating, you can shorten the heat-up time.

Suitable heating functions include:
- 3D hot air
- Top/bottom heating

Only use Rapid heating when a temperature of over 100 °C has been selected.

To achieve an even cooking result, do not place your food into the cooking compartment until Rapid heating is complete.

1. Set the heating function and temperature.
2. Touch the button.
   The » symbol will appear on the display.

The oven will start heating after a few seconds.

Once Rapid heating is complete, an audible signal will sound and the » symbol will go out.Place your food in the cooking compartment.

# Time-setting options

Your appliance has different time-setting options.

| Time-setting option | | Use |
|---|---|---|
| | Cooking time | Once the set cooking time has elapsed, the appliance will automatically stop heating. |
| | End time | Enter a cooking time and the required end time. The appliance will start up automatically so that it finishes cooking at the required time. |
| | Timer | The timer functions like an egg timer. It runs independently of the appliance when it is heating and of other time-setting options and does not affect the appliance. |
| | Time | When no other function is running in the foreground, the appliance will show you the time of day on the display. |

Before you can call up the cooking time using the button, you will need to set a heating function.Once you have set a cooking time, the end time can be called up. The timer can be set at any time.

An audible signal will sound once the cooking time or timer duration has elapsed. You can cancel the audible signal early by touching the button.

**Note:** You can change how long the audible signal sounds for in the basic settings. → *"Basic settings" on page 18*

## Setting the cooking time

You can set the cooking time for your food on the appliance. This prevents the food from accidentally being cooked for too long, and means that you do not have to stop what you are doing to switch off the oven.

The maximum time that can be set is 23 hours and 59 minutes. The cooking time can be set in 1-minute increments up to one hour, and then in 5-minute increments.

The cooking time will start at a different default value depending on which button you touch first:
10 minutes if you touch the **–** button and 30 minutes if you touch the **+** button.

Example in the picture: Cooking time of 45 minutes.
1. Set the type of heating and temperature or setting.
2. Touch the button twice.
   The cooking time will be highlighted on the display.

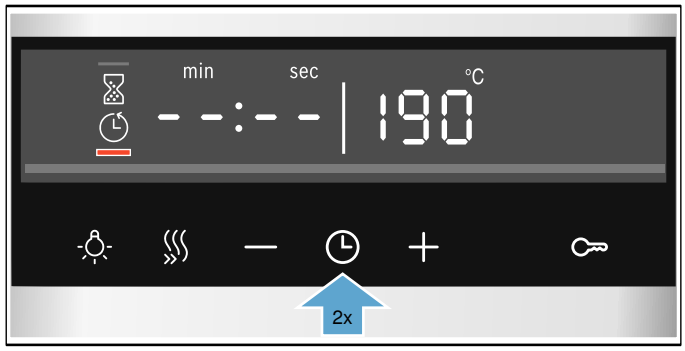

3. Use the – or + button to set the cooking time.

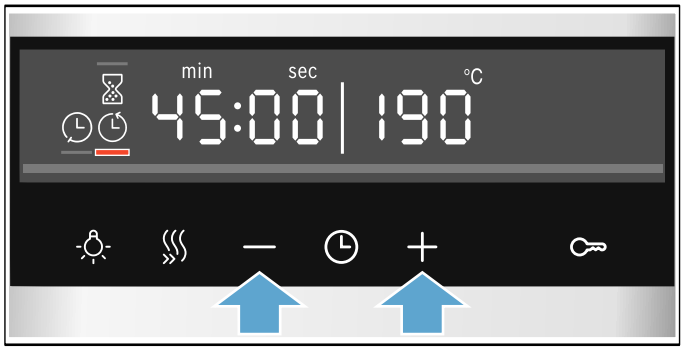


The appliance will start heating after a few seconds. The remaining time will count down on the display.

### The cooking time has elapsed

An audible signal will sound. The appliance will stop heating. The cooking time will be zero on the display.

Once the signal stops, you can touch the + button to set a new cooking time.

Once your food is cooked, turn the function selector to the "Off" position to switch the appliance off.

### Changing and cancelling

You can use the – or + button to change the cooking time at any time.After a few seconds, the change will be applied.

To cancel, use the – button to reset the cooking time all the way to zero. The appliance will continue heating without a cooking time.

### Checking time-setting options

If time-setting options have been set, the corresponding symbols are lit up on the display. The symbol for which the time is currently being displayed will be indicated.

To check the values for the different time-setting options, touch the ◷ button repeatedly until the required symbol is indicated.

## Setting the end time

You can delay the time at which cooking is due to finish. You can, for example, put your food in the cooking compartment in the morning and set the cooking time so that it is ready at lunch time.

### Notes

- Make sure that food is not left in the cooking compartment for too long as it may spoil.
- Do not adjust the end time once the appliance is already in operation. Otherwise the cooking result may no longer be satisfactory.

The end of the cooking time can be delayed by up to 23 hours and 59 minutes.

Example in the picture: The time is 10.30 a.m., a cooking time of 45 minutes has been set and you want the food to be ready at 12.30 p.m.

1. Set the type of heating and temperature or setting.
2. Touch the ◷ button twice and use the – or + button to set the cooking time.
3. Touch the ◷ button again.
   The end time ◷ will be highlighted on the display.

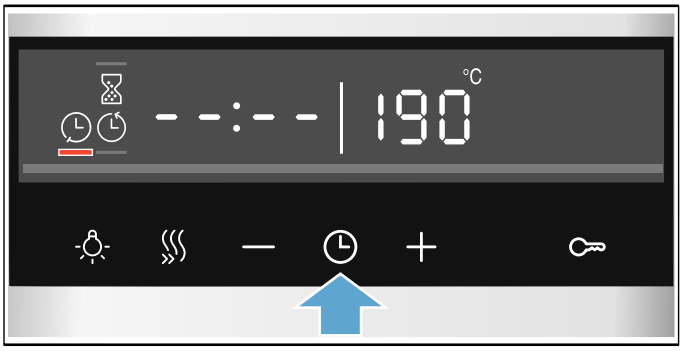


4. Use the + or – button to delay the end time.

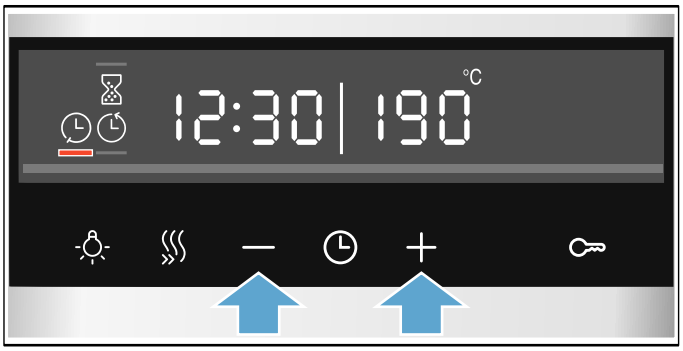


The appliance will apply the settings after a few seconds. The end time will be shown on the display. Once the appliance starts, the time will begin counting down.

### The cooking time has elapsed

An audible signal will sound. The appliance will stop heating. The cooking time will be zero on the display.

Once the signal stops, you can touch the + button to set a new cooking time.

Once your food is cooked, turn the function selector to the "Off" position to switch the appliance off.

### Changing and cancelling

You can use the – or + button to change the end time. After a few seconds, the change will be applied. The end time cannot be changed once the cooking time has already started to count down. Otherwise the cooking result would no longer be satisfactory.

To cancel, use the – button to set the end time all the way back to the current time plus the cooking time. The appliance will start to heat and the cooking time will start to count down.

### Checking time-setting options

If time-setting options have been set, the corresponding symbols are lit up on the display. The symbol for which the time is currently being displayed will be indicated.

To check the values for the different time-setting options, touch the ◷ button repeatedly until the required symbol is indicated.

## Setting the timer

The timer runs alongside other settings. You can set it at any time, even if the appliance has been switched off. It has its own audible signal so that you can tell whether it is the timer or a cooking time that has elapsed.

The maximum time that can be set is 23 hours and 59 minutes. Up to 10 minutes, the timer duration can be set in 30-second increments.Above 10 minutes, the time increments become longer the higher the value.

The timer duration will start at a different default value, depending on which button you touch first:
5 minutes if you touch the – button and 10 minutes if you touch the + button.

1. Touch the ⏲ button until the timer symbol ⌛ is underlined.
2. Use the – or + button to set the timer duration.

After a few seconds, the timer duration will start to count down.

**Tip:** If the set timer duration is the duration for which you wish to cook your food, use the cooking time. The appliance will then switch off automatically when it has finished cooking.

### The timer duration has elapsed

An audible signal will sound. The timer duration will be zero on the display.

Touch any button to switch off the timer.

### Changing and cancelling

You can use the – or + button to change the timer duration at any time. After a few seconds, the change will be applied.

To cancel, use the – button to reset the timer duration all the way to zero. The timer is now switched off.

### Checking time-setting options

If time-setting options have been set, the corresponding symbols are lit up on the display. The symbol for which the time is currently being displayed will be indicated.

To check the values for the different time-setting options, touch the ⏲ button repeatedly until the required symbol is indicated.

## Setting the time

Once the appliance has been connected to the mains or following a power failure, the clock will flash on the display. Set the time.

The function selector must be set to the "Off" position.

1. Use the – or + button to set the time.
   The time will stop flashing.
2. Confirm by pressing the ⏲ button.

The appliance will apply the time you have set.

**Note:** You can go to the basic settings to specify whether or not the time should be shown on the display.
→ *"Basic settings" on page 18*

### Changing the time

You can change the time again when you need to, e.g. from summer to winter time.

To do this, when the appliance is switched off, touch the ⏲ button until the symbol for the time is underlined, and use the – or + button to change the time.

# Meat thermometer

The meat thermometer makes precise cooking possible. It measures the temperature inside the food. Once the set temperature has been reached, the appliance automatically switches itself off.

## Types of heating

Not all types of heating are suitable for operation with the meat probe.

Suitable heating functions include:

- 3D hot air
- Hot air gentle
- Pizza setting
- Convection grilling
- Top/bottom heating

**Note:** If the meat probe is being used and you select an unsuitable type of heating, a signal will sound.

### Temperature

The meat probe measures the internal temperature of the food between 30 °C and 99 °C. You can set the core temperature you require on the display.

You can set the temperature of the cooking compartment as normal using the temperature selector. To avoid damaging the meat thermometer, do not set temperatures higher than 250 °C.

The cooking compartment temperature set must be at least 10 °C higher than the core temperature set.

## Inserting the meat probe into the food

Insert the meat probe into the food before placing your dish in the cooking compartment.

Use only the meat probe supplied. You can purchase one as a spare part from our after-sales service.

**⚠ Warning – Risk of electric shock!**
The insulation of an incompatible meat thermometer may be damaged. Only use the meat thermometer which is recommended for this appliance.

### Insertion

Insert the meat probe into the thickest part of the meat. Make sure that the end of the probe is roughly in the centre of the meat. It must not be inserted in the fat or be touching the ovenware or bones.

Place the meat (preferably in an item of cookware) in the centre of the wire shelf.

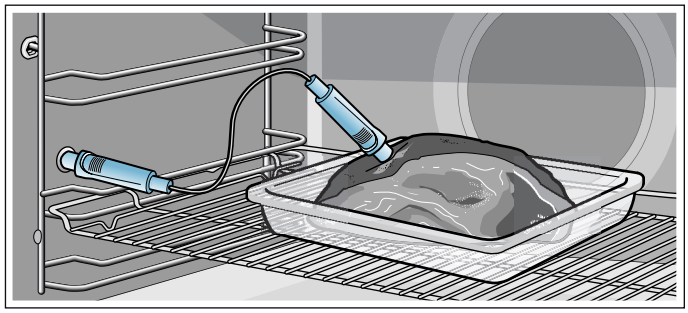

### Caution!

Ensure that the meat probe's cable does not become trapped.
To prevent the meat probe from being damaged by excessive heat, there must be a gap of a few centimetres between the grill element and the meat probe. The meat may expand during the cooking process.

### Turning the food

If you want to turn the food, do not remove the meat probe. Once you have turned the food, check that the meat probe is correctly positioned in the food.

If you remove the meat probe while the food is cooking, all the settings will be reset and you will have to configure them again.

## Setting the core temperature

If you have placed your dish with the meat probe in the cooking compartment, you can set the core temperature.

1. Insert the meat probe into the socket on the left-hand side of the cooking compartment and close the door.
   Ensure that the cable is not pinched or crushed.
2. Use the function selector to set an appropriate type of heating.
   The symbol will light up on the display and the core temperature indicator will appear next to the temperature of the cooking compartment.
3. Use the **–** or **+** button to set the core temperature.
   The recommended setting when using either button is 60 °C.
4. Use the temperature selector to set the temperature of the cooking compartment.
   Do not set the temperature higher than 250 °C.

The appliance will start heating after a few seconds.

The core temperature indicator on the display is divided into two parts during operation. The current core temperature of the meat is shown on the left, while the set core temperature is shown on the right, e.g. 15›75°C. The current temperature will not be displayed until it reaches at least 10 °C.

Once the food reaches the core temperature that has been set, a signal will sound. The appliance will stop heating. The current core temperature on the display is the same as the set temperature, e.g. 75›75°C.

Switch the appliance off by turning the function selector to the "Off" position. Pull the meat probe out of the socket in the cooking compartment.

**⚠ Warning – Risk of burns!**
The cooking compartment, accessories and meat thermometer become very hot. Always use oven gloves to remove hot accessories and the meat thermometer from the cooking compartment.

### Changing and cancelling

You can use the **–** or **+** button to change the core temperature at any time. The change will be applied after a few seconds.

If you want to cancel the process, remove the meat probe from the socket and the food. The appliance will continue heating without a core temperature setting.

The type of heating and the temperature of the cooking compartment can be changed at any time using the relevant selector. The core temperature setting will be retained.

## Core temperatures of different foods

Do not use frozen food. The figures in the table are given as a guide. They will depend on the quality and composition of the food.

You can find detailed information on types of heating and temperatures at the end of this instruction manual.
→ *"Tested for you in our cooking studio" on page 31*

| Food | Core temperature in °C |
|---|---|
| **Pork** | |
| Shoulder of pork | 85-90 |
| Fillet of pork, medium rare | 62-70 |
| Pork loin, well done | 72-80 |
| **Beef** | |
| Tenderloin or sirloin, rare | 45-52 |
| Tenderloin or sirloin, medium rare | 55-62 |
| Tenderloin or sirloin, well done | 65-75 |
| **Veal** | |
| Joint of veal or hock, lean | 75-80 |
| Joint of veal, shoulder | 75-80 |
| Knuckle of veal | 85-90 |
| **Lamb** | |
| Leg of lamb, medium rare | 60-65 |
| Leg of lamb, well done | 70-80 |
| Saddle of lamb, medium rare | 55-60 |

# Childproof lock

Your appliance is equipped with a childproof lock so that children cannot switch it on accidentally or change any settings.

**Notes**

- You can go to the basic settings to specify whether you want the option to set the childproof lock.
  → *"Basic settings" on page 18*
- If a hob is connected, it will not be affected by the childproof lock on the oven.

## Activating and deactivating

To activate the childproof lock, the function selector must be set to the "Off" position.

Press and hold the button for approx. 4 seconds.

The symbol for this function will appear on the display. The childproof lock is now activated.

**Note:** If a timer duration has been set, this will continue to count down. While the childproof lock is active, the timer duration cannot be changed.

To deactivate the childproof lock, press and hold the button again for approx. 4 seconds until the symbol goes out on the display.

# Basic settings

There are various settings available to you in order to help use your appliance effectively and simply. You can change these settings as required.

## List of basic settings

Depending on the features of your appliance, not all basic settings will be available.

| Basic setting | | Options |
|---|---|---|
| c01 | Audible signal duration upon completion of a cooking time or timer duration | 1 = approx. 10 seconds<br>2 = approx. 30 seconds*<br>3 = approx. 2 minutes |
| c02 | Amount of time until a setting is applied | 1 = approx. 3 seconds*<br>2 = approx. 6 seconds<br>3 = approx. 10 seconds |
| c03 | Button tone that sounds when a button is touched | 0 = off<br>1 = on* |
| c04 | Brightness of the display illumination | 1 = dark<br>2 = medium*<br>3 = bright |
| c05 | Display time of day | 0 = hide the time<br>1 = display the time* |
| c06 | Enable childproof lock activation? | 0 = no<br>1 = yes*<br>2 = yes, with locked door** |
| c07 | Interior lighting on when appliance in operation? | 0 = no<br>1 = yes* |
| c08 | Cooling fan run-on time | 1 = short<br>2 = medium*<br>3 = long<br>4 = extra long |
| c09 | Telescopic rails retrofitted?** | 0 = no* (for rails and single pull-out system)<br>1 = yes (for double and triple pull-out systems) |
| c 10 | Sabbath mode available? | 0 = no*<br>1 = yes |
| c 12 | Reset all values to factory settings? | 0 = no*<br>1 = yes |

* Factory setting (factory settings may vary depending on the appliance model)

** Not available for all appliance types.

## Changing the basic settings

The function selector must be set to the "Off" position.

1. Press and hold the ◷ button for approximately 4 seconds.
   The first basic setting will appear on the display, e.g. c01 1.
2. Turn the temperature selector to change the setting as required.
3. Use the **+** button to navigate to the next basic setting.
4. Using the **–** or **+** button, continue going through all the basic settings as described above, changing the settings if necessary using the temperature selector.
5. When you have finished, press and hold the ◷ button again for approximately 4 seconds to confirm the settings.

All basic settings have now been applied.

You can change the basic settings again at any time.

**Note:** Your changes to the basic settings will be retained even after a power failure.

# Sabbath mode

Sabbath mode lets you set a cooking time of over 70 hours. This enables you to keep dishes in the cooking compartment warm without having to switch the appliance on or off.

## Starting Sabbath mode

Before you can use Sabbath mode, you will need to activate it in the basic settings. → *"Basic settings" on page 18*

The appliance heats up with top/bottom heating. You can set a temperature between 85 °C and 140 °C. The cooking time can be adjusted to the nearest half hour between 24 and 72 hours.

1. Set the function selector to the programme. SAbb appears on the display.
2. Use the temperature selector to set the temperature.
3. Touch the ◷ button twice.
   The cooking time ◷ will be highlighted on the display.
4. Use the **+** or **–** button to set the cooking time.
   **Note:** The end time cannot be delayed.

The appliance will start heating after a few seconds. The remaining time will count down on the display.

When the cooking time for Sabbath mode has ended, an audible signal will sound. The appliance will stop heating. The time on the display will be zero.

Switch the appliance off by turning the function selector to the "Off" position.

### Changing and cancelling

The settings cannot be changed once the appliance has started.

If you would like to cancel Sabbath mode, switch the appliance off by turning the function selector to the "Off" position.

# Cleaning

With good care and cleaning, your appliance will retain its appearance and remain fully functioning for a long time to come. We will explain here how you should correctly care for and clean your appliance.

## Suitable cleaning agents

To ensure that the different surfaces are not damaged by using the wrong cleaning agent, observe the information in the table. Depending on the appliance model, not all of the areas listed may be on/in your appliance.

**Caution!**
**Risk of surface damage**
Do not use:
- Harsh or abrasive cleaning agents,
- Cleaning agents with a high alcohol content,
- Hard scouring pads or cleaning sponges,
- High-pressure cleaners or steam cleaners,
- Special cleaners for cleaning the appliance while it is hot.

Wash new sponge cloths thoroughly before use.

**Tip:** Highly recommended cleaning and care products can be purchased through the after-sales service. Observe the respective manufacturer's instructions.

**Warning – Risk of burns!**
The appliance becomes very hot. Never touch the interior surfaces of the cooking compartment or the heating elements. Always allow the appliance to cool down. Keep children at a safe distance.

| Area | Cleaning |
|---|---|
| **Appliance exterior** | |
| Stainless steel front | Hot soapy water:<br>Clean with a dish cloth and then dry with a soft cloth.<br>Remove flecks of limescale, grease, starch and albumin (e.g. egg white) immediately. Corrosion can form under such flecks.<br>Special stainless steel cleaning products suitable for hot surfaces are available from our after-sales service or from specialist retailers. Apply a very thin layer of the cleaning product with a soft cloth. |
| Plastic | Hot soapy water:<br>Clean with a dish cloth and then dry with a soft cloth.<br>Do not use glass cleaner or a glass scraper. |
| Painted surfaces | Hot soapy water:<br>Clean with a dish cloth and then dry with a soft cloth. |
| Control panel | Hot soapy water:<br>Clean with a dish cloth and then dry with a soft cloth.<br>Do not use glass cleaner or a glass scraper. |
| Door panels | Hot soapy water:<br>Clean with a dish cloth and then dry with a soft cloth.<br>Do not use a glass scraper or a stainless steel scouring pad. |
| Door handle | Hot soapy water:<br>Clean with a dish cloth and then dry with a soft cloth.<br>If descaler comes into contact with the door handle, wipe it off immediately. Otherwise, any stains will not be able to be removed. |
| **Appliance interior** | |
| Enamel surfaces and self-cleaning surfaces | Observe the instructions for the surfaces of the cooking compartment that follow the table. |
| Glass cover for the interior lighting | Hot soapy water:<br>Clean with a dish cloth and then dry with a soft cloth.<br>If the cooking compartment is heavily soiled, use oven cleaner. |
| Door seal<br>Do not remove. | Hot soapy water:<br>Clean with a dish cloth.<br>Do not scour. |
| Door cover | made from stainless steel:<br>Use stainless steel cleaner. Follow the manufacturers' instructions. Do not use stainless steel care products.<br>made from plastic:<br>Clean using hot soapy water and a dish cloth. Dry with a soft cloth. Do not use glass cleaner or a glass scraper.<br>Remove the door cover for cleaning. |
| Rails | Hot soapy water:<br>Soak and clean with a dish cloth or brush. |
| Pull-out system | Hot soapy water:<br>Clean with a dish cloth or a brush.<br>Do not remove the lubricant while the pull-out rails are pulled out – it is best to clean them when they are pushed in. Do not clean in the dishwasher. |
| Accessories | Hot soapy water:<br>Soak and clean with a dish cloth or brush.<br>If there are heavy deposits of dirt, use a stainless steel scouring pad. |
| Meat thermometer | Hot soapy water:<br>Clean with a dish cloth or a brush.<br>Do not clean in the dishwasher. |

### Notes

- Slight differences in colour on the front of the appliance are caused by the use of different materials, such as glass, plastic and metal.
- Shadows on the door panels, which look like streaks, are caused by reflections made by the interior lighting.
- Enamel is baked on at very high temperatures.This can cause some slight colour variation. This is normal and does not affect operation.
  The edges of thin trays cannot be completely enamelled. As a result, these edges can be rough. This does not impair the anti-corrosion protection.

## Surfaces in the cooking compartment

The back wall, ceiling and side parts in the cooking compartment are self-cleaning. You can tell this from the rough surface.

The cooking compartment floor is enamelled and has smooth surfaces.

### Cleaning enamel surfaces

Clean the smooth enamel surfaces with a dish cloth and hot soapy water or a vinegar solution. Then dry them with a soft cloth.

Soften baked-on food remnants with a damp cloth and soapy water. Use stainless steel wire wool or oven cleaner to remove stubborn dirt.

### Caution!

Never use oven cleaner in the cooking compartment when it is still warm. This may damage the enamel. Remove all food remnants from the cooking compartment and the appliance door before you next heat up the appliance.

Leave the cooking compartment open to dry after cleaning it.

**Note:** Food residues can cause white deposits to form. These are harmless and do not affect how the appliance works. You can remove these residues using lemon juice if required.

### Cleaning self-cleaning surfaces

The self-cleaning surfaces are coated with a porous, matte ceramic layer. This coating absorbs and dispels splashes from baking and roasting while the appliance is in operation.

If the self-cleaning surfaces no longer clean themselves sufficiently and dark stains appear, they can be cleaned using the cleaning function. To do this, refer to the information in the relevant section. → *"Cleaning function" on page 22*

### Caution!

Do not use oven cleaner on self-cleaning surfaces. This will damage the surfaces. If oven cleaner does get onto these surfaces, dab it off immediately using water and a sponge cloth. Do not rub the surface and do not use abrasive cleaning aids.

## Keeping the appliance clean

Always keep the appliance clean and remove dirt immediately so that stubborn deposits of dirt do not build up.

**⚠ Warning – Risk of fire!**
Loose food remnants, fat and meat juices may catch fire. Before using the appliance, remove the worst of the food remnants from the cooking compartment, heating elements and accessories.

### Tips

- Clean the cooking compartment after each use. This will ensure that dirt cannot be baked on.
- Always remove flecks of limescale, grease, starch and albumin (e.g. egg white) immediately.
- Use the universal pan for baking very moist cakes.
- Use suitable ovenware for roasting, e.g. a roasting dish.

# Cleaning function

The self-cleaning surfaces in the cooking compartment are cleaned with the “EcoClean” cleaning function.

The self-cleaning surfaces (back panel, ceiling panel and side panels) are coated with a porous, matt ceramic material. This coating absorbs and breaks down splashes from baking, roasting and grilling while the oven is in operation. If the surfaces no longer clean themselves adequately and dark patches appear, the surfaces can be cleaned by the cleaning function.

## Cleaning recommendation

The appliance records how long it is in operation and which operating mode is used. When cleaning is recommended, CL will appear on the display when the appliance is switched off. You can dismiss this message by pressing any button except the – button. The prompt will continue to be displayed, however, until the cleaning function has been run in full.

**Note:** You can completely reset the cleaning recommendation counter by pressing and holding the – button for approximately 4 seconds.
The prompt will not reappear until the appliance has been used a certain number of times again.

**Caution!**
If you do not act on this cleaning recommendation, the self-cleaning surfaces in the cooking compartment may become damaged.

If your appliance is already very dirty, e.g. because you have used it to cook fatty poultry or roasts, or if you notice dark patches on the self-cleaning surfaces, do not delay running the cleaning function until this prompt appears. The more often or the earlier the appliance is cleaned, the longer the self-cleaning surfaces will retain their ability to clean themselves. You can clean the cooking compartment at any time as required using the cleaning function.

## Prior to initiating the cleaning function

Remove shelves, rails, accessories and ovenware from the cooking compartment.

### Cleaning the cooking compartment floor and the inside of the appliance door

Remove the worst dirt from the cooking compartment floor, the inside of the appliance door and the interior lighting. Otherwise, patches will appear that can no longer be removed.

**Caution!**
Do not use oven cleaner on the self-cleaning surfaces. This will damage the surfaces. If oven cleaner does come into contact with these surfaces, dab it off immediately with water and a sponge cloth. Please to not rub or use any abrasive cleaning materials.
→ *"Cleaning" on page 20*

**Warning – Risk of burns!**
The appliance will become very hot on the outside during the cleaning function. Never touch the appliance door. Allow the appliance to cool down. Keep children away from the appliance.

## Setting the cleaning function

Make sure you follow all the preparation instructions before setting the cleaning function.

The cleaning function is preset to run for 1 hour. This cannot be changed.

1. Use the function selector to set EcoClean.
   The length of the cycle will appear on the display.
2. Turn the temperature selector.
   On appears on the display.

The cleaning function will start in a few seconds. The remaining time will count down on the display.

Ventilate the kitchen while the cleaning function is running.

An audible signal will sound when the cleaning function has finished. The time on the display will be zero. Switch the appliance off by turning the function selector to the "Off" position.

### Delaying the end time

You can delay the end time if required. Before starting, touch the button until the "End" symbol is highlighted on the display. Use the + button to delay the end time.

The appliance will switch to standby after it is started.

### Changing and cancelling

The end time can be changed while the appliance is on standby.

If you would like to cancel the cleaning function, switch the appliance off by turning the function selector to the "Off" position.

## Once the cleaning function has ended

Once the cooking compartment has cooled down, wipe down the cooking compartment with a damp cloth if necessary.

**Note:** During operation and while the cleaning function is active, reddish patches may form on the surfaces. This is not rust, but food residues. These patches are not hazardous to your health and do not limit the cleaning capacity of the self-cleaning surfaces.

# Rails

With good care and cleaning, your appliance will retain its appearance and remain fully functional for a long time to come. This will tell you how to remove the shelves and clean them.

## Detaching and refitting the rails

**⚠ Warning – Risk of burns!**
The rails become very hot. Never touch the hot rails. Always allow the appliance to cool down. Keep children away from the appliance.

### Detaching the rails

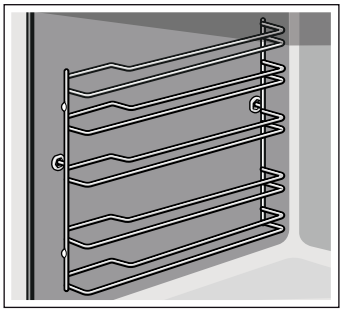

1. Lift the rail slightly at the front **a** and detach it **b** (figure **1**).
2. Then pull the whole rail towards you and take it out (figure **2**).

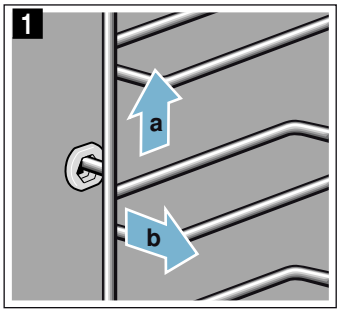


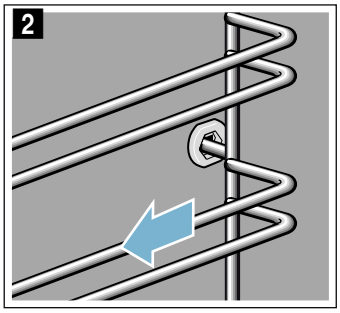


Clean the rails with cleaning agent and a sponge. For stubborn deposits of dirt, use a brush.

### Attaching the rails

The rails only fit on the right or the left side. For both rails, ensure that the curved rods are at the front.

1. First, insert the rail in the middle of the rear socket **a**, until the rail rests against the cooking compartment wall, and push it back **b** (figure **1**).
2. Then insert the rail into the front socket **c**, until the rail also rests against the cooking compartment wall here, and press it downwards **d** (figure **2**).

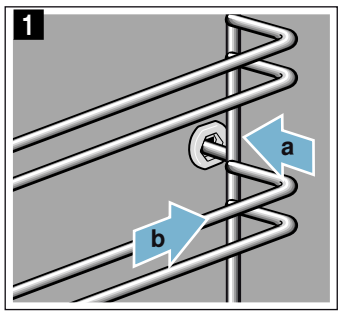


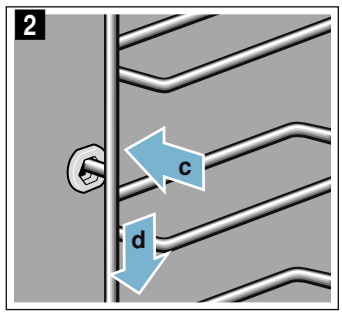


## Fitting and removing the pull-out rails

On appliance models with shelf supports, you must change the basic settings to "Telescopic rails: Yes".For more information, refer to the "Basic settings" section.
→ *Page 18*

If necessary, you can use pull-out rails on all levels.

If your appliance features the EcoClean Direct cleaning function, you will need to take the entire shelf supports for fitting and removing the pull-out rails out of the cooking compartment. Otherwise, the EcoClean Direct coating may be damaged.

If your appliance features the pyrolytic self-cleaning function, you will need to take the pull-out rails out of the cooking compartment before running the cleaning function.The pull-out rails are not suitable for pyrolytic self-cleaning.

### Notes

- Only use the pull-out rails in conjunction with the universal pan, baking tray, wire rack and accessories that are placed on the wire rack. All other accessories are unsuitable.
- The pull-out rails are not suitable for appliances with a microwave function.

**⚠ Warning – Risk of burns!**
The rails become very hot. Never touch the hot rails. Always allow the appliance to cool down. Keep children away from the appliance.

### Removing the pull-out rails

1. Push on the tab marked "PUSH" behind the end of the rail, and push the rail away from you (fig. **1**).

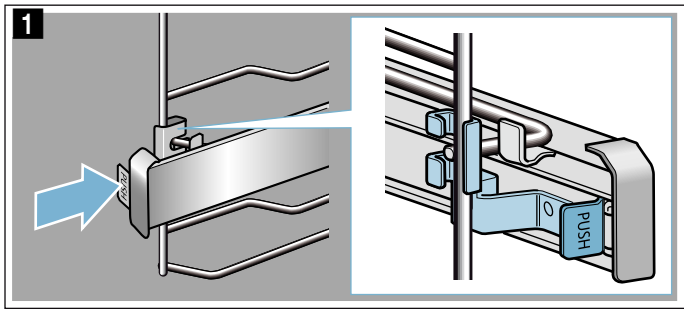

2. Keep the "PUSH" tab pushed back and swing the rail out (fig. 2).

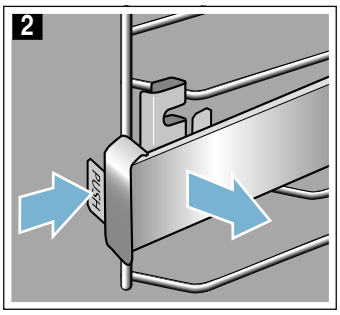


3. Pull the rail out towards you until the retainer at the back unhooks (fig. 3).

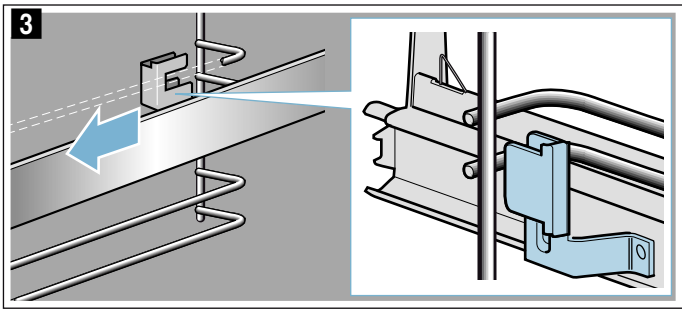


4. Remove the pull-out rail (fig. 4).

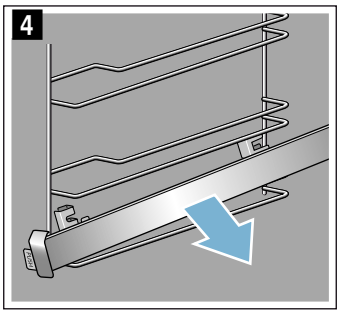


Use washing-up liquid and a sponge to clean the pull-out rails. For stubborn dirt deposits, use a brush.

## Fitting the pull-out rails

The rails are designed to fit on either the right- or the left-hand side (not both).Make sure when you fit them that you can pull them out towards you.

1. The rail must sit between the two bars (fig. 1).

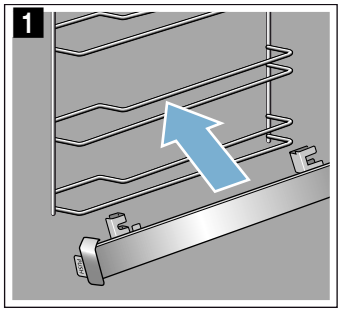


2. Push the retainer at the back in between the lower and the upper bar (fig. 2).

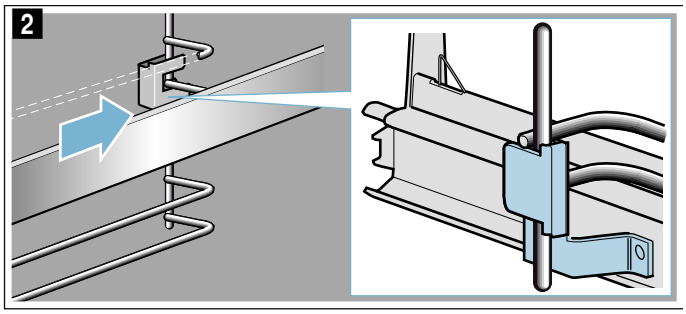


3. Push on the "PUSH" tab and swing the rail in so that the retainer ends up between the two bars (fig. 3).

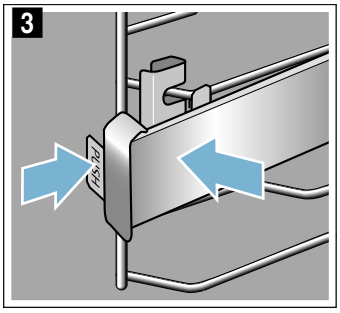


4. Release the "PUSH" tab; the retainer will hook into place (fig. 4). Then pull the rail out as far as it will go and slide it back in.

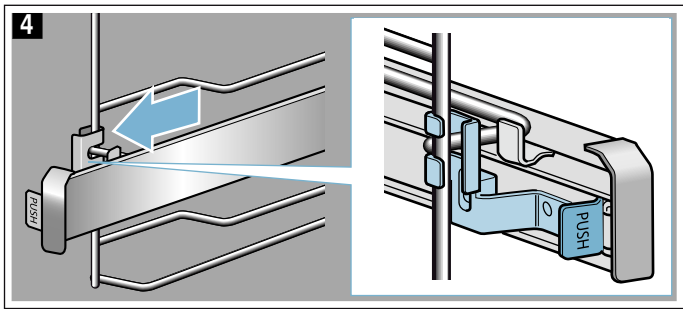

# Appliance door

With good care and cleaning, your appliance will retain its appearance and remain fully functional for a long time to come. This will tell you how to clean the appliance door.

## Removing and installing the door panels

To facilitate cleaning, you can remove the glass panels from the appliance door.

### Locking the appliance door

1. Open the appliance door fully.
2. Open the two locking levers on the left and right (fig. 1).
3. Close the appliance door as far as it goes (fig. 2).

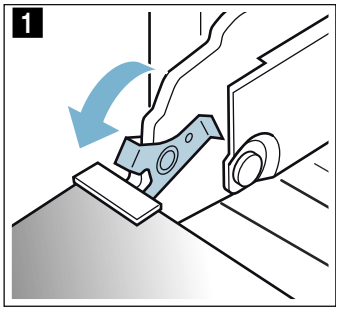
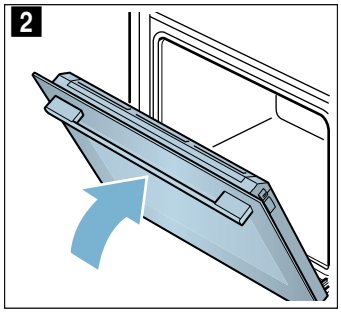

### Removing panels

1. Open the appliance door slightly.
2. Press the left- and right-hand sides of the cover (fig.° 1).
3. Remove the cover (fig. 2).

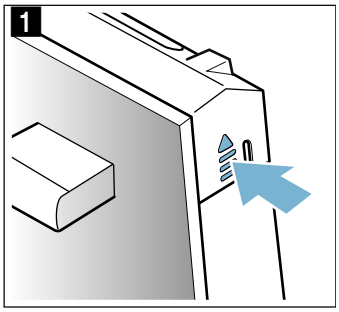
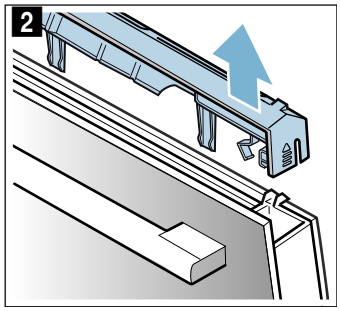

4. Lift out the outer panel (fig. 3) and set it down carefully on a flat surface.
5. Lift out the inner panel (fig. 4) and set it down carefully on a flat surface.

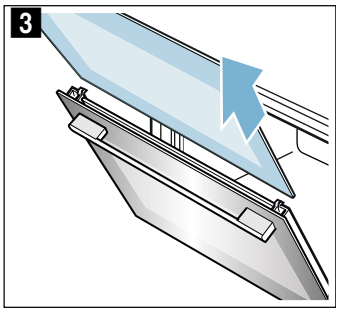
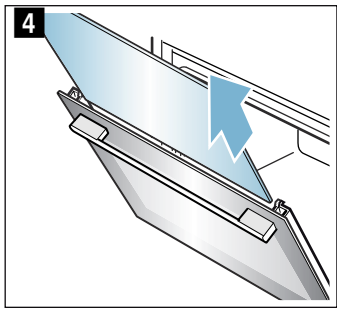

6. If necessary, you can remove the condensate trough for cleaning. To do this, open the appliance door fully (fig. 5).
7. Tilt the condensate trough up and remove it (fig. 6).

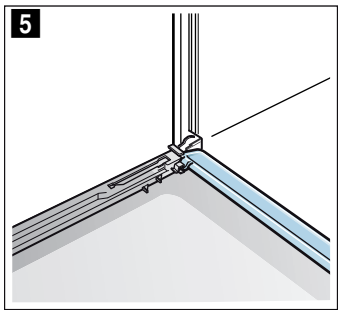
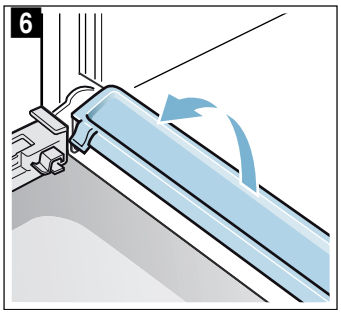

Clean the panels with glass cleaner and a soft cloth. Wipe the condensate trough with a cloth and some hot soapy water.

**⚠ Warning**
**Risk of injury!**

- Scratched glass in the appliance door may develop into a crack. Do not use a glass scraper, sharp or abrasive cleaning aids or detergents.
- The hinges on the appliance door move when opening and closing the door, and you may be trapped. Keep your hands away from the hinges.

### Fitting panels

1. Open the appliance door fully and refit the condensate trough. To do this, insert the trough from above and rotate it at the bottom (fig. 1).

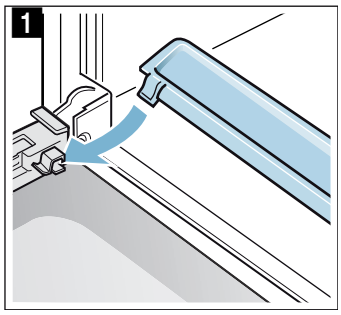

2. Slide each inner panel back in and make sure that it is sitting correctly at the bottom in the retainer (fig. 2).

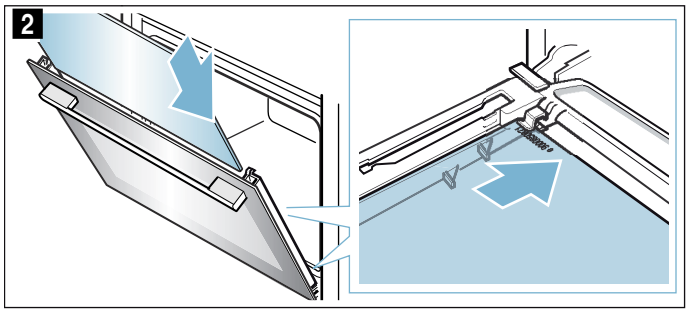

3. Push the inner panel in at the top (fig. 3).

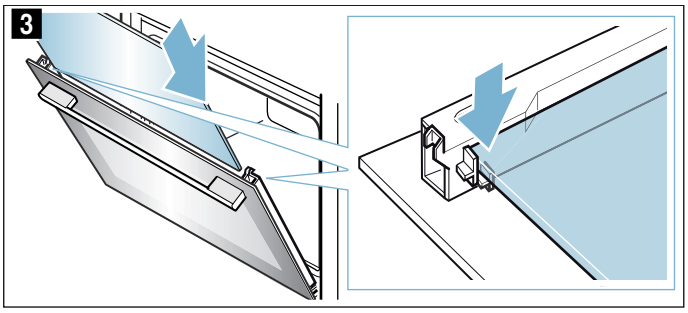

4. Slide the outer panel back in and make sure that it is sitting correctly at the bottom in the retainer (fig. 4).

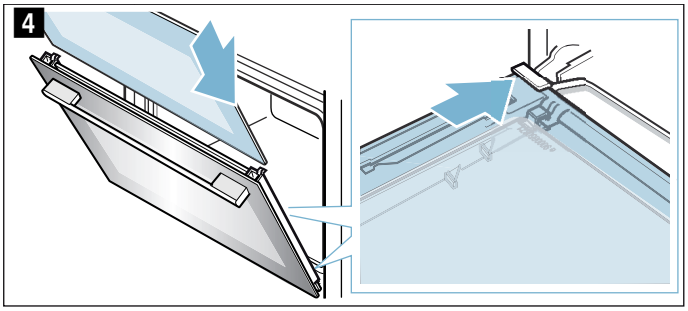

5. Push the outer panel in at the top (fig. 5).

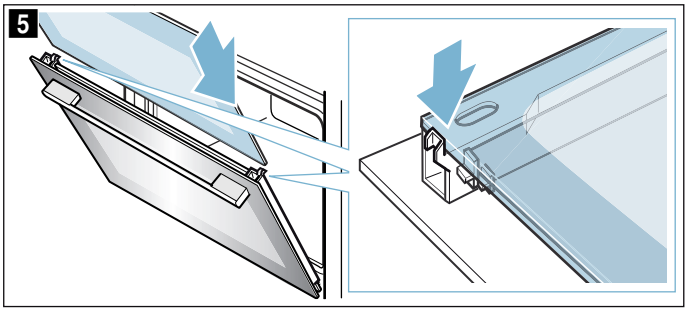

6. Put the cover back in place and press on it until you hear it click into place (fig. 6).
7. Open the appliance door again fully.
8. Close the two locking levers on the left and right (fig. 7)

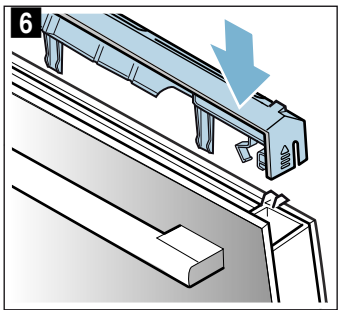

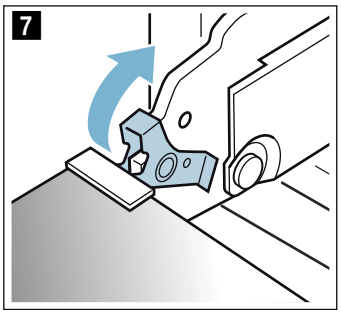

9. Close the appliance door.

**Caution!**
Do not use the cooking compartment again until the panels have been correctly fitted.

# Trouble shooting

If a fault occurs, there is often a simple explanation. Before calling the after-sales service, please refer to the fault table and attempt to correct the fault yourself.

## Rectifying faults yourself

You can often easily rectify technical faults with the appliance yourself.

If a dish does not turn out exactly as you wanted, you can find useful cooking tips and instructions at the end of this instruction manual. → *"Tested for you in our cooking studio" on page 31*

| Fault | Possible cause | Notes/remedy |
|---|---|---|
| The appliance is not working. | Defective circuit breaker. | Check the circuit breaker in the fuse box. |
| | Power failure | Check whether the kitchen light or other kitchen appliances are working. |
| The time is flashing on the display. | Power failure. | Reset the time. |
| The settings on the appliance cannot be configured. A key symbol has lit up on the display or SAFE. | The childproof lock is activated. | Deactivate the childproof lock by pressing and holding the button with the key symbol for approx. 4 seconds. |
| CL appears on the display. | Cleaning recommendation. | Run the cleaning function in full. The message can be dismissed by pressing any button. It will continue to be displayed, however, until the cleaning function has been run in full. |
| After an operating mode is switched on, h is flashing on the display. | The appliance has not cooled down sufficiently. | Switch off the appliance, allow it to cool down and switch on the operating mode again. |
| The appliance is not heating. The colon is flashing on the display. On some appliances, a d will also appear on the display. | Demo mode is activated. | Briefly disconnect the appliance from the mains (switch off the circuit breaker in the fuse box) and then deactivate demo mode within approx. 5 minutes by changing the basic setting c 13 or cb to 0. → *"Basic settings" on page 18* |

**⚠ Warning – Risk of electric shock!**
Incorrect repairs are dangerous. Repairs may only be carried out and damaged power cables replaced by one of our trained after-sales technicians. If the appliance is defective, unplug the appliance from the mains or switch off the circuit breaker in the fuse box. Contact the after-sales service.

### Error messages on the display

If an error message with "E" appears on the display, e.g. E05-32, touch the ⏲ button. This will reset the error message. Reset the time, if necessary.

If the fault was a one-off, you can continue to use your appliance as normal. If the error message appears again, call our after-sales service and quote the exact error message and the E no. of your appliance.
→ *"Customer service" on page 28*

## Maximum operating time

If you do not change the settings on your appliance for several hours, the appliance will stop heating automatically. This prevents unintentional continuous operation.

When the maximum operating time is reached depends on the various different settings that have been configured on the appliance.

**Maximum operating time reached**
F8 appears on the display.

Turn the function selector to the "Off" position. You can configure new settings if required.

**Tip:** To prevent the appliance from switching off when you do not want it to, e.g. with an extremely long cooking time, you should always set a cooking time. The appliance will heat up until the set cooking time has elapsed.

## Replacing the bulb in the top of the cooking compartment

If the cooking compartment light bulb fails, it must be replaced. Heat-resistant, 25 watt, 230 V halogen bulbs are available from the after-sales service or specialist retailers.

When handling the halogen bulb, use a dry cloth. This will increase the service life of the bulb. Only use these bulbs.

**⚠ Warning – Risk of electric shock!**
When replacing the cooking compartment bulb, the bulb socket contacts are live. Before replacing the bulb, unplug the appliance from the mains or switch off the circuit breaker in the fuse box.

**⚠ Warning – Risk of burns!**
The appliance becomes very hot. Never touch the interior surfaces of the cooking compartment or the heating elements. Always allow the appliance to cool down. Keep children at a safe distance.

1. Place a tea towel in the cold cooking compartment to prevent damage.
2. Turn the glass cover anti-clockwise to remove it (figure 1).
3. Pull out the bulb – do not turn it (figure 2).
   Insert the new bulb, making sure that the pins are in the correct position. Push the bulb in firmly.

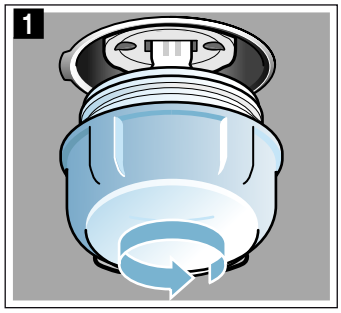


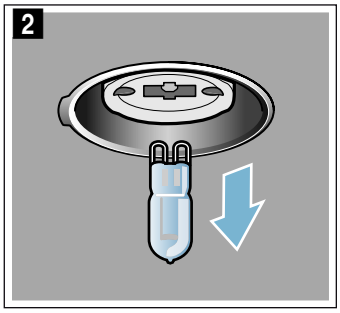


4. Screw the glass cover back on.
   Depending on the appliance model, the glass cover may have a sealing ring. If the glass cover has a sealing ring, put it back in place before screwing the cover back on.
5. Remove the tea towel and switch on the circuit breaker.

# Customer service

Our after-sales service is there for you if your appliance needs to be repaired. We will always find an appropriate solution, also in order to avoid after-sales personnel having to make unnecessary visits.

## E number and FD number

When calling us, please quote the full product number (E no.) and the production number (FD no.) so that we can provide you with the correct advice. The rating plate bearing these numbers can be found when you open the appliance door.
On some appliances with a steam-assisted cooking function, you will find the rating plate behind the control panel.

To save time, you can make a note of the numbers for your appliance and the telephone number of the after-sales service in the space below in case you need them.

| | | | |
|---|---|---|---|
| **E no.** | | **FD no.** | |

| | |
|---|---|
| **After-sales service** ☏ | |

Please note that a visit from an after-sales service engineer is not free of charge in the event that the appliance has been misused, even during the warranty period.

Please find the contact data of all countries in the enclosed customer service list.

**To book an engineer visit and product advice**

**GB** 0344 892 8979
Calls charged at local or mobile rate.

**IE** 01450 2655
0.03 € per minute at peak. Off peak 0.0088 € per minute.

Rely on the professionalism of the manufacturer. You can therefore be sure that the repair is carried out by trained service technicians who carry original spare parts for your appliances.

# Programmes

You can prepare food very easily using the various programmes. Simply select a programme and the appliance will apply the optimal settings for you.

To achieve good results, the cooking compartment must not be too hot. Allow the cooking compartment to cool before starting the programme.

## Cookware

Follow the instructions provided by the cookware manufacturer.

**Suitable cookware:**
Use cookware that is heat-resistant up to 300 °C.

Glass or glass ceramic cookware is best. The grill can heat through the glass lid and the roast will become nice and crispy on the outside.

Roasting dishes made from stainless steel are not ideal.Their shiny surface reflects a high proportion of the radiated heat.The food will brown less readily and the meat will be less well done. If you are using a stainless steel roasting dish, remove the lid once the programme has come to an end. Grill the meat at grill setting 3 for an additional 8 to 10 minutes.

The food will brown more quickly from below if you use a roasting dish made of enamelled steel, cast iron or die-cast aluminium.Add a little more liquid.

**Tip:** If the gravy is too light or too dark, add less or more liquid next time.

**Unsuitable cookware:**
Cookware made of bright, shiny aluminium, unglazed clay or plastic, and cookware with plastic handles, is not suitable.

**Size of the cookware:**
The roast should cover around two thirds of the cookware base.This will ensure that you get good meat juices.

The distance between the meat and the lid should be at least 3 cm. The meat may expand as it roasts.

## Preparing food

Use frozen products straight from the freezer. For meat dishes, use fresh food, ideally at fridge temperature.

**Tip:** Very lean meat will remain more succulent if it is covered with rashers of bacon.

Weigh your food. You need the weight in order to set the programme. Always round up to the nearest weight.

Place the cookware onto the wire rack. Always place the ovenware into the cooking compartment without preheating it.

## Programmes

When the roast is ready, it can be left to rest for an additional 10 minutes in the cooking compartment with the appliance switched off and the door closed. This allows for better distribution of the meat juices.

**Note:** The weight range is deliberately limited.For very large items of food, there is often no suitable cookware available, meaning that the cooking result would not be what was expected.

| Programme | | Food | Cookware | Add liquid | Shelf position | Set weight | Notes |
|---|---|---|---|---|---|---|---|
| 01 | **Pizza**, thin-crust | Frozen, prebaked | Universal pan with grease-proof paper | No | 3 | Total weight | The cooking compartment must be cold to begin with. For a second pizza, follow the instructions on the packaging. |
| 02 | **Pizza**, deep-pan | Frozen, prebaked | Universal pan with grease-proof paper | No | 3 | Total weight | The cooking compartment must be cold to begin with. For a second pizza, follow the instructions on the packaging. |
| 03 | **Lasagne** | Frozen | Original packaging | No | 3 | Total weight | - |
| 04 | **Chips** | Frozen | Universal pan with grease-proof paper | No | 3 | Total weight | Spread out on the universal pan. |
| 05 | **Prebaked bread rolls** | Frozen, prebaked | Universal pan with grease-proof paper | No | 3 | Total weight | - |
| 06 | **Potato gratin** | - | Ovenproof dish without lid | No | 2 | Total weight | - |
| 07 | **Pasta bake** | With precooked pasta | Ovenproof dish without lid | No | 2 | Total weight | - |
| 08 | **Baked potatoes**, whole | Unpeeled, starchy potatoes | Universal pan | No | 3 | Total weight | - |
| 09 | **Stew**, with vegetables | Vegetarian | Deep roasting dish with lid | As per recipe | 2 | Total weight | Cut vegetables that take longer to cook (e.g. carrots) into smaller pieces than vegetables that take less time to cook (e.g. tomatoes) |
| 10 | **Stew**, with meat | - | Deep roasting dish with lid | As per recipe | 2 | Total weight | Do not sear the meat beforehand |
| 11 | **Goulash** | Diced beef or pork with vegetables | Deep roasting dish with lid | As per recipe | 2 | Total weight | Place the meat at the bottom and cover with vegetables.<br>Do not sear the meat beforehand |
| 12 | **Fish**, whole | Ready to cook, seasoned | Roasting dish with lid | Cover the bottom of the roasting dish | 2 | Fish weight | - |
| 13 | **Chicken**, not stuffed | Ready to cook, seasoned | Roasting dish with glass lid | No | 2 | Chicken weight | Place in the cookware with the breast at the top |
| 14 | **Chicken pieces** | Ready to cook, seasoned | Roasting dish with lid | Cover the bottom of the roasting dish | 2 | Weight of the heaviest piece | - |
| 15 | **Turkey breast** | Whole, seasoned | Roasting dish with glass lid | Cover the bottom of the roasting dish, and add up to 250 g vegetables if you wish | 2 | Turkey breast weight | - |
| 16 | **Duck**, unstuffed | Ready to cook, seasoned | Roasting pan without lid | No | 2 | Duck weight | - |

| Programme | | Food | Cookware | Add liquid | Shelf position | Set weight | Notes |
|---|---|---|---|---|---|---|---|
| 17 | **Goose**, unstuffed | Ready to cook, seasoned | Roasting pan without lid | No | 2 | Goose weight | - |
| 18 | **Pot-roasted beef** | E.g. forerib, shoulder, rump or marinated beef roast | Roasting dish with lid | Cover the bottom of the roasting dish, and add up to 250 g vegetables if you wish | 2 | Meat weight | Do not sear the meat beforehand |
| 19 | **Sirloin**, medium | Ready to cook, seasoned | Roasting pan without lid | No | 2 | Meat weight | Do not sear the meat beforehand; place in the cookware fatty side up |
| 20 | **Beef olives** | Stuffed with vegetables or meat | Roasting dish with lid | Add stock, water or another liquid to the dish until the beef olives are almost covered | 2 | Total weight of all the stuffed beef olives | Do not sear the meat beforehand |
| 21 | **Meat loaf,** fresh | Minced beef, pork or lamb | Roasting dish with lid | No | 2 | Roast weight | Do not sear the meat beforehand |
| 22 | **Leg of lamb**, medium | Boned, seasoned | Roasting dish with lid | Cover the bottom of the roasting dish, and add up to 250 g vegetables if you wish | 2 | Meat weight | Do not sear the meat beforehand |
| 23 | **Leg of lamb**, well done | Boned, seasoned | Roasting dish with lid | Cover the bottom of the roasting dish, and add up to 250 g vegetables if you wish | 2 | Meat weight | Do not sear the meat beforehand |
| 24 | **Joint of veal**, marbled | E.g. saddle or topside | Roasting dish with lid | Cover the bottom of the roasting dish, and add up to 250 g vegetables if you wish | 2 | Meat weight | Do not sear the meat beforehand |
| 25 | **Joint of veal**, lean | E.g. tenderloin or eye | Roasting dish with lid | Cover the bottom of the roasting dish, and add up to 250 g vegetables if you wish | 2 | Meat weight | Do not sear the meat beforehand |
| 26 | **Haunch of roe venison** | Boned, seasoned with salt | Roasting dish with lid | Cover the bottom of the roasting dish, and add up to 250 g vegetables if you wish | 2 | Meat weight | - |
| 27 | **Rabbit**, whole | Ready to cook, seasoned inside | Roasting dish with glass lid | Cover the bottom of the roasting dish, and add up to 250 g vegetables if you wish | 2 | Meat weight | - |
| 28 | **Shoulder of pork** | Boned, seasoned | Roasting dish with glass lid | Cover the bottom of the roasting dish, and add up to 250 g vegetables if you wish | 2 | Meat weight | Do not sear the meat beforehand |
| 29 | **Joint of pork**, with crackling | E.g. shoulder, seasoned, and scored rind | Roasting dish with glass lid | Cover the bottom of the roasting dish, and add up to 250 g vegetables if you wish | 2 | Meat weight | Place in the cookware fatty side up; salt the rind well |
| 30 | **Fillet of pork** | Seasoned | Roasting dish with glass lid | Cover the bottom of the roasting dish, and add up to 250 g vegetables if you wish | 2 | Meat weight | Do not sear the meat beforehand |

## Setting a programme

The appliance chooses the optimal heating function and the time and temperature setting. All you need to do is set the weight.

The weight can only be set within defined limits.

1. Set the function selector to Programmes ⊞.
2. Use the + or – button to set the required programme.
3. Using the temperature selector, set the weight of your food.

The programme will start after a few seconds.The cooking time will count down on the display.

Once the programme has ended, an audible signal will sound. The cooking time will be zero on the display.

If the food has been cooked to your liking, switch the appliance off by turning the function selector to the "Off" position.

### Programme duration

You can find out how long the programme you have set is going to take. Before starting, touch the ◷ button until the "Duration" symbol is highlighted on the display. Touch the ◷ button again until the programme or weight is displayed again.

You cannot change the preset duration of a programme.

### Extending the cooking time

Once the programme and the audible signal stop, you can touch the + button to set a new cooking time. The appliance will resume heating using the programme settings.

**Note:** You can extend the cooking time as many times as required.

If the food has been cooked to your liking, switch the appliance off by turning the function selector to the "Off" position.

### Setting a later end time

With some programmes, you can set a later end time. Before starting, touch the ◷ button until the "End" symbol is highlighted on the display. Use the + button to delay the end time.

The appliance switches to standby after it is started.

### Changing and cancelling

Once the appliance is started, the programme number and the weight cannot be changed.

The end time can be changed while the appliance is on standby.

If you would like to cancel the programme, switch the appliance off by turning the function selector to the "Off" position.

# Tested for you in our cooking studio

Here, you can find a selection of dishes and the ideal settings for them. We will show you which type of heating and temperature are best suited to your dish. You will get information on suitable cooking accessories and the height at which they should be placed in the oven. You will also get tips about cookware and preparation methods.

**Note:** A lot of steam can build up in the cooking compartment when cooking food.
Your appliance is very energy-efficient and radiates very little heat to its surroundings during operation. Due to the high difference in temperature between the appliance interior and the external parts of the appliance, condensation may build up on the door, control panel or adjacent kitchen cabinet panels. This is a normal physical phenomenon. Condensation can be reduced by preheating the oven or opening the door carefully.

### Caution!

Never pour water into the hot cooking compartment or place cookware containing water onto the bottom of the cooking compartment. The change in temperature can cause damage to the enamel.

## General information

### Recommended setting values

The table lists the optimal heating type for various types of food. The temperature and cooking time are dependent on the quantity of food and the recipe. Settings ranges are indicated for this reason. Try using the lower values to start with. A lower temperature will result in more even browning. You can use a higher setting next time if necessary.

**Note:** Cooking times cannot be reduced by using higher temperatures. The food would only be cooked on the outside, but would not be fully baked in the middle.

The setting values apply to food that is placed into a cold cooking compartment. By doing so, you can make energy savings of up to 20 per cent. If you preheat the oven, you can reduce the indicated baking times by several minutes.

Preheating is necessary for selected food, and this is indicated in the table. Do not place your food or accessories into the cooking compartment until it has finished preheating.

If you wish to follow one of your own recipes when baking, you should use the setting values listed for similar food in the table as reference. Additional information can be found in the baking tips listed after the settings tables.

Remove unused accessories from the cooking compartment. This will ensure that you achieve the best possible cooking results and energy savings of up to 20 per cent.

### Accessories

Only use original accessories supplied with your appliance. These have been tailored to the cooking compartment and the operating modes of your appliance.

Ensure that you always use suitable accessories and that they are placed in the oven the right way around.
→ *"Accessories" on page 11*

### Greaseproof paper

Only use greaseproof paper that is suitable for the selected temperature. Always cut greaseproof paper to size.

### Gentle hot air heating function

Gentle hot air is an intelligent heating function that allows you to gently cook meat, fish and baked items. The appliance optimally controls the supply of energy to the cooking compartment. The food is cooked in phases using residual heat. This means that it remains more succulent and browns less. Depending on the method of preparation and the type of food, it is possible to save energy. If you open the appliance door before the food has finished cooking or if you preheat the appliance, you may not be able to achieve this result.

Only use genuine accessories for your appliance. These have been tailored to the cooking compartment and the heating functions of your appliance.Remove any accessories that are not being used from the cooking compartment.

Place the food into the empty cooking compartment before the oven is heated up. Always keep the appliance door closed when cooking.Only cook on one level when using this function.

The Gentle hot air heating function is used to measure both the energy consumption in air recirculation mode and the energy efficiency class.

## Baking

Here, you can find recommended settings for many dishes.

In addition, refer to the information in the section on proving dough.

### Baking on one level

When baking on one level, use the following shelf positions:
- Tall baked goods or tin on wire rack: Level 2
- Flat baked goods or goods in a baking tray: Level 3

### Baking on two or more levels

Use hot air. Items that are placed in the oven on baking trays or in baking tins/dishes at the same time will not necessarily be ready at the same time.
Baking on two levels:
- Universal pan: Position 3
  Baking tray: Position 1
- Baking tins/dishes on the wire rack
  First wire rack: Position 3
  Second wire rack: Position 1

Baking on three levels:
- Baking tray: Position 5
  Universal pan: Position 3
  Baking tray: Position 1

You can cut energy use by up to 45% by preparing items at the same time. Position baking tins/dishes either next to one another or offset on different shelves so that they are not directly one above the other in the cooking compartment.

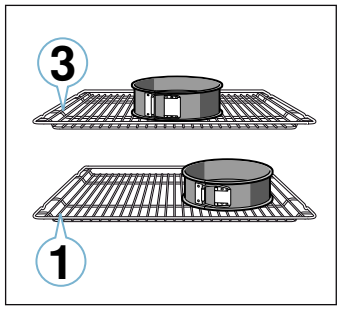


### Baking tins

For optimal cooking results, we recommend using dark-coloured metal baking tins.

Tinplate baking tins, ceramic dishes and glass dishes extend baking time and mean that the baked item will not brown evenly.

If you are using silicone moulds, follow the manufacturer's instructions and recipes. Silicone moulds are often smaller than normal baking tins. Quantity and recipe specifications may vary.

### Baking

**Baking on one level**

| Food | Dish | Shelf position | Type of heating | Temperature in °C | Time in minutes |
|---|---|---|---|---|---|
| Victoria sponge cake | 2x Ø20cm tins | 2 | | 150-160* | 15-20 |
| Light fruit cake | High Ø20cm tin | 2 | | 140-160 | 70-100 |
| Rich fruit cake | High Ø23cm tin | 2 | | 140-150 | 180-210 |

* Preheat; do not use rapid heat-up function
** Preheat for 5 mins; do not use rapid heat-up function
*** Preheat with Hotair 180 °C
**** Preheat for 20 mins

| Food | Dish | Shelf position | Type of heating | Temperature in °C | Time in minutes |
|---|---|---|---|---|---|
| Fruit crumble | Flat glass dish | 3 | | 160-180* | 30-40 |
| Sponge Cake (fatless), 3 eggs | Springform cake tin Ø26cm | 2 | | 160-170 | 30-35 |
| Swiss roll | Swiss roll tin | 3 | | 180-190* | 10-15 |
| Fruit Pie | Plate Ø20cm or pie tin | 2 | | 160-170 | 60-70 |
| Quiche | Quiche tin (dark coated) | 3 | | 190-200 | 45-55 |
| (White) Bread | Loaf tin (1x900g or 2x 450g) | 2 | | 190-210* | 25-40 |
| Scones | Baking sheet on wire rack | 3 | | 170-190 | 15-20 |
| Biscuits | Baking sheet on wire rack | 3 | | 140-160* | 10-20 |
| Small Cakes | 12-cup-tin | 3 | | 150** | 25-35 |
| Puff pastry slices | Baking tray | 3 | | 170-190* | 25-35 |
| Jam tarts | 12-cup-tin | 3 | | 170-190* | 15-25 |
| Meringue | Baking sheet on wire rack | 3 | | 80-90* | 120-150 |
| Pavlova | Baking sheet on wire rack | 3 | | 100-110*** | 150-180 |
| Choux pastry | Baking tray | 3 | | 190-210 | 35-50 |
| Meat Pie | Pie dish | 2 | | 180-200 | 40-50 |
| Yorkshire pudding | 12-cup-tin | 3 | | 210-220**** | 18-22 |
| Jacket potatoes | Baking tray | 3 | | 150-170 | 75-90 |
| Pizza, homemade | Baking tray | 3 | | 210-230 | 25-35 |
| Pizza, homemade, thin base | Pizza tray | 2 | | 250-270 | 8-13 |

* Preheat; do not use rapid heat-up function
** Preheat for 5 mins; do not use rapid heat-up function
*** Preheat with Hotair 180 °C
**** Preheat for 20 mins

### Baking on two or more levels

| Food | Dish | Shelf position | Type of heating | Temperature in °C | Time in minutes |
|---|---|---|---|---|---|
| Victoria sponge cake, 2 levels | 4x Ø20cm tins | 3+1 | | 150-160* | 15-25 |
| Scones, 2 levels | 2 baking sheets on 2 wire racks | 3+1 | | 150-170* | 14-20 |
| Biscuits, 2 levels | 2 baking sheets on 2 wire racks | 3+1 | | 140-160* | 15-25 |
| Biscuits, 3 levels | 3 baking sheets on 3 wire racks | 5+3+1 | | 140-160* | 15-25 |
| Small Cakes, 2 levels | 2x 12-cup-tins | 3+1 | | 150** | 20-30 |
| Puff pastry slices, 2 levels | Universal pan + baking tray | 3+1 | | 170-190* | 25-45 |
| Puff pastry slices, 3 levels | Baking trays + universal pan | 5+3+1 | | 170-190* | 25-45 |
| Jam tarts, 2 levels | 2x 12-cup-tins | 3+1 | | 170-190* | 15-25 |
| Meringue, 2 levels | 2 baking sheets on 2 wire racks | 3+1 | | 90-100* | 100-130 |
| Jacket potatoes, 2 levels | Universal pan + baking tray | 3+1 | | 150-170* | 75-90 |
| (White) Bread, 2 levels | 4x loaf tins | 3+1 | | 170-190* | 30-40 |
| Pizza, homemade, 2 levels | Universal pan + baking tray | 3+1 | | 180-200 | 35-45 |

* Preheat
** Preheat for 5 mins; do not use rapid heat-up function

### Baking tips

| | |
|---|---|
| You want to find out whether the baked item is completely cooked in the middle. | Push a cocktail stick into the highest point on the baked item. If the cocktail stick comes out clean with no dough residue, the baked item is ready. |
| The baked item collapses. | Next time, use less liquid. Alternatively, set the temperature 10 °C lower and extend the baking time. Adhere to the specified ingredients and preparation instructions in the recipe. |
| The baked item has risen in the middle but is lower around the edge. | Only grease the base of the springform cake tin. After baking, loosen the baked item carefully with a knife. |
| The fruit juice overflows. | Next time, use the universal pan. |
| Small baked items stick to one another during baking. | There should be a gap of approx. 2 cm around each item. This gives enough space for the baked items to expand well and brown on all sides. |
| The baked item is too dry. | Set the temperature 10 °C higher and shorten the baking time. |
| The baked item is too light in colour overall. | If the shelf position and the accessories are correct, then you should increase the temperature if necessary or extend the baking time. |
| The baked item is too light on top, and too dark underneath. | Bake the cake one level higher in the oven the next time. |
| The baked item is too dark on top, and too light underneath. | Bake the cake one level lower in the oven the next time. Select a lower temperature and extend the baking time. |
| The baked item is too dark in a tin or loaf tin. | Place the baking tray in the middle of the accessory, not directly against the back wall. |
| The baked item is too dark in colour overall. | Select a lower temperature next time and extend the baking time if necessary. |
| The baked item is unevenly browned. | Select a slightly lower temperature.<br>Protruding greaseproof paper can affect the air circulation. Always cut greaseproof paper to size.<br>Ensure that the baking tin does not stand directly in front of the openings in the cooking compartment back wall.<br>When baking small items, you should use similar sizes and thicknesses wherever possible. |
| You were baking on several levels. The items on the top baking tray are darker than those on the lower baking tray. | Always select hot air when baking on several levels. Baked items that are placed into the oven on trays or in baking tins at the same time will not necessarily be ready at the same time. |
| The baked item looks good, but is not cooked properly in the middle. | Use a lower temperature and bake slightly longer; if necessary, add slightly less liquid. For baked items with a moist topping, bake the base first. Sprinkle it with almonds or breadcrumbs and then place the topping on top. |
| The baked item cannot be turned out of the dish when it is turned upside down. | Allow the baked item to cool down for 5 to 10 minutes after baking. If it still sticks, carefully loosen it around the edges again using a knife. Turn the baked item upside down again and cover it several times with a cold, wet cloth. Next time, grease the baking tin and sprinkle with breadcrumbs. |

## Roasting, braising and grilling

Here, you will find information on roasting, braising and grilling poultry, meat and fish. The settings tables list the optimal settings for a wide range of dishes.

### Poultry.

When cooking duck or goose, pierce the skin on the underside of the wings. This allows the fat to run out.

If using duck breast, score the skin. Do not turn duck breasts.

Add some liquid to the poultry in the dish. Cover the base of the ovenware with approx. 1-2 cm of liquid.

When you turn poultry, ensure that the breast side or the skin side is underneath at first.

Poultry will turn out particularly crispy and brown if you baste it towards the end of the roasting time with butter, salted water or orange juice.

### Meat

Baste lean meat with fat as required or cover it with strips of bacon. Score the rind crosswise. If you turn the joint when cooking it, ensure that the rind is underneath to begin with.

When the joint is ready, turn off the oven and allow it to rest for a further 10 minutes in the cooking compartment, keeping the door closed. This helps distribute the meat juices more evenly. Wrap the joint in aluminium foil if necessary. The recommended resting time is not included in the indicated cooking time.

### Fish

Whole fish does not need to be turned.Place the whole fish into the cooking compartment in its swimming position, with the dorsal fin at the top. Placing half a potato or a small oven-proof container in the stomach cavity of the fish will keep it upright.

You can tell when the fish is cooked because the dorsal fin can be removed easily.

### Roasting and braising on the wire rack

On the wire rack, poultry and meat will become very crispy on all sides.Roasting on the wire rack works particularly well for large poultry or for multiple pieces at the same time.

Add up to 1/2 litre of water to the universal pan, depending on the size and type of meat. Any dripping fat and meat juices will be caught. You can make a sauce from these juices. This will also result in less smoke being produced and keep the cooking compartment cleaner.

Slide the universal pan into the oven at the indicated shelf position with the wire rack on top. Ensure that the wire rack is correctly positioned on the universal pan.

### Roasting and braising in cookware

**⚠ Warning – Risk of injury from shattering glass!**
Place hot glass cookware on a dry mat after cooking. The glass may crack if placed on a cold or wet surface.

**⚠ Warning – Risk of scalding!**
Very hot steam may escape when opening the lid after cooking. Lift the lid at the rear, so that the hot steam can escape away from you.

It is more convenient to roast and braise meat in cookware. You can take the joint out of the cooking compartment more easily in the cookware, and prepare the sauce in the cookware itself.

Only use cookware that is suitable for use in an oven. Check whether the cookware fits in the cooking compartment.

It is best to use glass cookware. Place hot glass cookware onto a dry mat after cooking. The glass may crack if placed on a cold or wet surface.

When roasting poultry and other meat, add a little liquid.

The liquid in the cookware evaporates as the meat roasts. Carefully pour in more liquid if required.

Shiny roasting dishes made from stainless steel or aluminium reflect heat like a mirror and are therefore not particularly suitable. The meat cooks more slowly and does not brown so well. Use a higher temperature and/or a longer cooking time.

Follow the manufacturer's instructions for your roasting dishes.

### Roasting in uncovered cookware

It is best to use a deep roasting dish for roasting poultry and meat. Place the dish onto the wire rack. If you do not have any suitable cookware, use the universal pan.

### Braising in covered cookware

Cooking with covered cookware keeps the cooking compartment considerably cleaner. Ensure that the lid fits well and closes properly. Place the cookware onto the wire rack.

The distance between the meat and the lid should be at least 3 cm, as the meat may expand.

Very hot steam may escape when the lid is opened after cooking. Lift the lid at the rear, so that the hot steam can escape away from you.

To braise the meat, sear it first as required. Add water, wine, vinegar or a similar liquid to the braising liquid. Cover the bottom of the cookware with at least 2 cm of liquid.

The liquid in the cookware evaporates as the meat roasts. Carefully pour in more liquid if required.

### Grilling flat items

Flat pieces of poultry, meat and fish, such as steaks, drumsticks and burgers, can be cooked effectively using the "Grill" heating function. It is also excellent for toasting bread.

### Grilling

Keep the appliance door closed when using the grill. Never grill with the appliance door open.

Place the food to be grilled on the wire rack. In addition, slide the universal pan in at least one shelf position lower, with the slanted edge facing the appliance door. Any dripping fat will be caught.

When grilling, try wherever possible to use pieces of food which are of a similar thickness and weight. This will allow them to brown evenly and remain succulent and juicy. Place the food to be grilled directly onto the wire rack.

Use tongs to turn the pieces of food you are grilling. If you pierce the meat with a fork, the juices will run out and it will become dry.

Do not add salt to the meat until it has been grilled. Salt draws water from the meat.

### Notes

- The grill element switches itself continuously on and off; this is normal. The grill setting determines how frequently this occurs.
- Smoke may be produced when grilling.

### Meat thermometer

Depending on your appliance's features, you may have a meat thermometer. You can cook accurately using a meat thermometer. Read important notes on using the meat thermometer in the corresponding chapter. There, you can find notes on inserting the meat thermometer, the possible heating types and additional information.
→ *"Meat thermometer" on page 16*

### Recommended setting values

The table lists values for poultry, meat and fish, with default values for the weight.

The setting values are based on the assumption that unstuffed, chilled, ready-to-roast poultry, meat or fish is placed into a cold cooking compartment.

If you wish to cook heavier poultry, meat or fish, always use the lower temperature. If cooking more than one item, use the weight of the heaviest item as a basis for determining the cooking time. The individual pieces should be approximately the same size.

As a general rule: The larger the poultry, meat or fish, the lower the cooking temperature and the longer the cooking time.

Turn the poultry, meat or fish after approx. ½ to ⅔ of the time listed.

Cover the bottom of the glass cookware with approx. 1/2 cm of liquid.

The quantity of liquid depends on the type of meat, the material the cookware is made from and on whether or not a lid is used. If you are cooking meat in an enamelled or dark-coloured metal roasting dish, it will need a little more liquid than if cooked in glass cookware.

Calculating the cooking time (e.g. 20+35):

To calculate the cooking time, assume 20 minutes per 500 g of meat plus an extra 35 minutes. For 1.5 kg, the cooking time would therefore be 95 minutes.

Cooking time range (e.g. 10-15):

Your food will be ready within the specified range of time (in minutes).

## Roasting, braising and grilling

### Roasting and Braising

| Food | Dish | Shelf position | Type of heating | Temperature in °C | Time in minutes |
|---|---|---|---|---|---|
| Slow roast joint (beef) | Cookware, uncovered | 2 | | 140 | 50+50 |
| Beef top side / top rump | Cookware, uncovered | 2 | | 170 | 40+30 |
| Lamb leg (bone-in) | Cookware, uncovered | 2 | | 160-170 | 25+15 |
| Lamb shoulder (bone-in) | Cookware, uncovered | 2 | | 160-170 | 15+25 |
| Lamb shoulder (boned and rolled) | Cookware, uncovered | 2 | | 170-180 | 18+30 |
| Rack of lamb** | Cookware, uncovered | 2 | | 170-190* | 15+20 |
| Pork, roast joint | Cookware, uncovered | 2 | | 180-190 | 30+35 |
| Pork, loin joint | Cookware, covered | 2 | | 250-260 | 20+50 |
| Pork, belly | Cookware, uncovered | 2 | | 230-240*** | 17+70 |
| Pork, gammon joint | Cookware, uncovered | 2 | | 160-170*** | 30+30 |
| Chicken, whole | Cookware, uncovered | 2 | | 200-210 | 25+15 |
| Chicken portion, bone-in, 200-250g each | Cookware, uncovered | 2 | | 200-220 | 40-50 |
| Duck, 2-3 kg | Cookware, uncovered | 2 | | 180-190 | 25+20 |
| Turkey, crown | Wire rack | 2 | | 140-150**** | 20+25 |
| Turkey, thighs | Cookware, uncovered | 2 | | 180-190 | 40+25 |
| Turkey, whole, 4-8kg | Wire rack | 1 | | 150-160 | 12+12 |
| Fish, braised, whole 300g, e.g. trout | Cookware, covered | 2 | | 170-190 | 25-35 |
| Fish, braised, whole 1,5kg, e.g. salmon | Cookware, covered | 2 | | 180-200 | 55-65 |
| Fish fillet, plain, braised, 400g | Cookware, covered | 2 | | 170-190 | 30-40 |
| Meat loaf | Wire rack | 2 | | 170-180 | 20+40 |
| Diced meat (beef, pork, lamb), 500g meat | Cookware, covered | 2 | | 140 | 120-140 |
| Diced chicken (boned), 500g meat | Cookware, covered | 2 | | 140 | 100-120 |
| Braising steak | Cookware, covered****** | 2 | | 140 | 100-120 |
| Complete meal with beef | Wire rack + wire rack + universal pan | 4+1 | | 160, then 200 (yorkshire pudding) | beef: (20+15) + 20 for yorkshire pudding |
| Complete meal with chicken | Wire rack + wire rack + universal pan | 4+1 | | 180, then 200 (yorkshire pudding) | chicken: (25+25) + 20 for yorkshire pudding |

* Preheat

** Without fat layer (best end neck), do not turn

*** Do not turn

**** Bone side down, do not turn

### Grilling

| Food | Dish | Shelf position | Type of heating | Grill setting | Time in minutes |
|---|---|---|---|---|---|
| Beef steak, height 2-3cm, medium | Wire rack | 3 | | 3 | 1. side 11-13 |
| | | | | | 2. side 4-6 |
| Beef burger, height 1-2cm | Wire rack | 5 | | 3* | 1. side 8-9 |
| | | | | | 2. side 4-5 |
| Lamb chops, height 1-2cm | Wire rack | 3 | | 3** | 1. side 5-6 |
| | | | | | 2. side 5-6 |
| Bacon rashers | Wire rack*** | 3 | | 3** | 1. side 4-5 |
| | | | | | 2. side 3-4 |
| Sausages, thickness 2-4cm | Wire rack | 3 | | 3* | 10-20**** |
| Fish fillets/chops | Wire rack | 4 | | 3* | 12-18 |
| Grilling white bread | Wire rack | 5 | | 3 | 3-5 |

* Preheat for 3 mins
** Preheat for 5 mins; do not use rapid heat-up function
*** Slide the universal pan in underneath at shelf position 2
**** Turn over several times

| Food | Dish | Shelf position | Type of heating | Temperature in °C | Time in minutes |
|---|---|---|---|---|---|
| Beef top side / top rump | Cookware, uncovered | 2 | | 160 | 40+35 |
| Lamb leg (bone-in) | Cookware, uncovered | 2 | | 160-170 | 25+15 |
| Lamb shoulder (bone-in) | Cookware, uncovered | 2 | | 170-180 | 15+15 |
| Lamb shoulder (boned and rolled) | Cookware, uncovered | 2 | | 160-170 | 20+15 |
| Rack of lamb** | Cookware, uncovered | 2 | | 170-190* | 15+25 |
| Pork, roast joint | Cookware, uncovered | 2 | | 180-200 | 30+40 |
| Pork, loin joint | Cookware, uncovered | 3 | | 180-190*** | 35+35 |
| Pork, belly | Cookware, uncovered | 2 | | 200-210*** | 25+20 |
| Pork, gammon joint | Cookware, uncovered | 2 | | 170-180*** | 25+20 |
| Chicken drumstick, 150g each | Cookware, uncovered | 3 | | 210-230 | 30-40 |
| Chicken portion, bone-in, 200-250g each | Cookware, uncovered | 3 | | 200-220 | 35-45 |
| Chicken, whole | Cookware, uncovered | 2 | | 200-220 | 20+15 |
| Duck, 2-3 kg | Cookware, uncovered | 2 | | 190-200 | 20+20 |
| Turkey, thighs | Cookware, uncovered | 2 | | 160-170 | 35+30 |
| Turkey, whole, 4-8kg | Wire rack | 1 | | 140-160 | 10+40 |
| Trout, whole, 300g each | Wire rack | 2 | | 160-180 | 20-30 |

* Preheat
** Without fat layer (best end neck), do not turn
*** Do not turn

## Ready meals

Here, you will find the ideal settings for preparing chilled and frozen meals.

### Notes

- The cooking result greatly depends on the quality of the food. Pre-browning and irregularities are sometimes already present on the raw product.
- Do not use frozen products that are covered with a thick layer of ice. Remove any ice on the food.
- Distribute foods that are in the form of separate pieces, such as bread rolls and potato products, so that they are spread out flat and evenly on the accessory. Leave a little space between the individual pieces.
- Follow the manufacturer's instructions on the packaging.

### Shelf positions

Use the shelf positions indicated.

### Baking on one level

When baking on one level, use the following shelf positions:
- Tall baked items: Position 2
- Flat baked items: Position 3

### Baking on two levels

Use 3D hot air. Items that are placed in the oven on baking trays or in baking tins/dishes at the same time will not necessarily be ready at the same time.
- Universal pan: Position 3
  Baking tray: Position 1

### Recommended setting values

The table lists the optimal heating function for various types of food.The temperature and cooking time depend on the amount and consistency of the dough/ mixture. Settings ranges are specified for this reason. Try using the lower values to start with. A lower temperature will result in more even browning. You can use a higher setting next time if necessary.

### Baking

| Food | Dish | Shelf position | Type of heating | Temperature in °C | Time in minutes |
|---|---|---|---|---|---|
| Pizza, chilled | Wire rack | 3 | | 190-210 | 15-20 |
| Pizza, frozen, thin base | Wire rack | 3 | | 210-230 | 15-20 |
| Pizza, frozen, thin base, 2 levels | Universal pan + wire rack | 3+1 | | 190-210 | 20-25 |
| Pizza, frozen, thick base | Wire rack | 3 | | 180-200 | 20-25 |
| Pizza, frozen, thick base, 2 levels | Universal pan + wire rack | 3+1 | | 190-210 | 20-30 |
| Oven chips, Croquettes, frozen | Universal pan | 3 | | 190-210 | 25-35 |
| Oven chips, frozen, 2 levels | Universal pan + baking tray | 3+1 | | 190-210 | 30-40 |
| Hash browns, frozen | Universal pan | 2 | | 210-230 | 30-40 |
| Fish fingers, frozen | Universal pan | 3 | | 200-220 | 20-25 |
| Chicken nuggets, frozen | Universal pan | 3 | | 190-210 | 20-25 |
| Lasagna, chilled, 500g | Ovenproof dish on wire rack | 2 | | 180-200 | 30-40 |
| Lasagna, chilled, 1,5kg | Ovenproof dish on wire rack | 2 | | 190-210 | 35-45 |
| Lasagna, frozen, 500g | Ovenproof dish on wire rack | 2 | | 180-200 | 45-55 |
| Lasagna, frozen, 1,5kg | Ovenproof dish on wire rack | 2 | | 170-190 | 75-85 |

## Desserts

You can make your own soufflés and yogurt using your appliance.

**Soufflés**
You can also prepare soufflés in a water bath in the universal pan. To do so, slide the universal pan in at level 2.

**Yogurt**
Remove accessories and shelves from the cooking compartment. The cooking compartment must be empty.

1. Heat 1 litre of milk (3.5 % fat) to 90 °C on the hob and then cool down to 40 °C.
   It is sufficient to heat UHT milk to 40 °C.
2. Stir in 150 g (chilled) yogurt.
3. Pour into cups or small jars and cover with cling film.
4. Place the cups or jars onto the cooking compartment floor and set as indicated in the table.
5. After preparation, leave the yogurt to cool in the refrigerator.

| Dish | Accessories/cookware | Shelf position | Heating function | Temperature in °C | Cooking time in mins |
|---|---|---|---|---|---|
| Yoghurt | Individual moulds | - | | 40-45 | 8-9h |
| Soufflé in individual moulds | Individual moulds | 2 | | 160-180 | 35-45 |

## Acrylamide in foodstuffs

Acrylamide is mainly produced in grain and potato products prepared at high temperatures, such as potato crisps, chips, sliced bread, bread rolls, bread or fine baked goods (biscuits, gingerbread, spiced biscuit).

| Tips for keeping acrylamide to a minimum | |
|---|---|
| General | ■ Keep cooking times as short as possible.<br>■ Cook food until it is golden brown, but not too dark.<br>■ Large, thick pieces of food contain less acrylamide. |
| Baking | With top/bottom heating at max. 200 °C.<br>With hot air at max. 180 °C. |
| Biscuits | With top/bottom heating at max. 190 °C.<br>With hot air at max. 170 °C.<br>Egg or egg yolk reduces the production of acrylamide. |
| Oven chips | Spread out a single layer evenly on the baking tray. Cook approx. 400-600 g at once on a baking tray so that the chips do not dry out and become crunchy. |

## Drying

You can achieve outstanding drying results with hot air.With this type of preserving, flavours are concentrated as a result of the dehydration.

Only use unblemished, fresh fruit, vegetables and herbs and wash them thoroughly. Line the wire rack with greaseproof paper or parchment paper. Drain the excess water from the fruit and then dry it.

If necessary, cut it into equal chunks or thin slices. Place unpeeled fruit onto the dish with the sliced surfaces facing upwards. Ensure that neither fruit nor mushrooms overlap on the wire rack.

Grate vegetables and then blanch them.Drain the blanched vegetables thoroughly and spread them evenly on the wire rack.

Dry herbs on the stem. Position the herbs evenly and slightly heaped on the wire rack.

Use the following shelf positions for drying:
- 1 wire rack: Position 3
- 2 wire racks: Positions 3 + 1

Turn very juicy fruit and vegetables several times. After drying, remove the dried fruit and vegetables from the paper immediately.

In the table, you will find settings for drying various foodstuffs. The temperature and drying time are dependent on the type, moisture, ripeness and thickness of the food to be dried.The longer you leave the food to be dried, the better it will be preserved.The thinner the slices are, the quicker the drying process will be and the more flavour the dried food will retain. For this reason, the table specifies setting ranges.

If you wish to dry food that is not listed in the table, you should use similar foodstuffs in the table as a reference.

| Fruit, vegetables and herbs | Accessories | Heating function | Tempera-ture in °C | Cooking time in hours |
|---|---|---|---|---|
| Pomes (apple rings, 3 mm thick, 200 g per wire rack) | 1-2 wire racks | | 80 | 4-8 |
| Root vegetables (carrots), grated, blanched | 1-2 wire racks | | 80 | 4-7 |
| Sliced mushrooms | 1-2 wire racks | | 80 | 5-8 |
| Herbs, prepared | 1-2 wire racks | | 60 | 2-5 |

## Preserving

You can preserve fruit and vegetables using your appliance.

**⚠ Warning – Risk of injury!**
If the food is preserved incorrectly, the preserving jars may burst. Follow the instructions for preserving.

**Jars**
Only use clean and undamaged preserving jars. Only use heat-resistant, clean and undamaged rubber rings. Check clips and clamps in advance.

For each preserving process, only use preserving jars that are the same size and contain the same food. In the cooking compartment, you can preserve the contents of a maximum of six ½, 1 or 1½-litre preserving jars at the same time. Do not use jars that are larger or taller than this. The lids could rupture.

Preserving jars must not touch one another in the cooking compartment during the preserving process.

**Preparing fruit and vegetables**
Only use fruit and vegetables that are in good condition. Wash them thoroughly.

Peel, core and chop fruit and vegetables appropriate to their type and fill the preserving jars with them up to approx. 2 cm below the rim.

Fruit: Fill the preserving jars with the fruit along with a hot, skimmed sugar solution (approx. 400 ml for a 1-litre jar). For one litre of water:
- Approx. 250 g sugar for sweet fruit
- Approx. 500 g sugar for sour fruit

Vegetables: Fill the jars with the vegetables along with hot, boiled water.

Wipe the rims of the jars, as they must be clean. Place a damp rubber ring and a lid on each jar. Seal the jars with the clips. Place the jars into the universal pan so that they do not touch each other. Pour 500 ml hot water (approx. 80 °C) into the universal pan. Use the settings indicated in the table.

**Ending the preserving process**
Fruit: After a short while, small bubbles will form at short intervals. Switch off the appliance once all preserving jars are bubbling. Remove the jars from the cooking compartment after the indicated residual heating time.

Vegetables: After a short while, small bubbles will form at short intervals. As soon as all preserving jars are bubbling, reduce the temperature to 120 °C and allow the jars to continue to bubble in the closed cooking compartment as indicated in the table. After this time has elapsed, switch off the appliance and make use of the residual heat for several minutes as indicated in the table.

After preserving, remove the jars from the cooking compartment and place them onto a clean cloth. Do not place these hot jars onto a cold or damp surface, as they may crack. Cover the preserving jars to protect them from draughts. Only remove the clamps once the jars are cold.

The indicated times in the settings table are average values for preserving fruit and vegetables. They may be influenced by room temperature, the number of jars, quantity, heat and quality of the jar contents. The specifications are based on 1-litre round jars. Before you switch off the appliance or change the cooking mode, check whether the contents of the jars are bubbling as they should. The bubbling process starts after approx. 30-60 minutes.

| Meal | Accessory/cook-ware | Shelf posi-tion | Heating function | Step | Tempera-ture in °C | Cooking time in mins |
|---|---|---|---|---|---|---|
| Vegetables, e.g. carrots | 1-litre preserving jars | 1 | | 1. | 160-170 | Before it starts bubbling: 30-40 |
| | | | | 2. | 120 | Once it starts bubbling: 30-40 |
| | | | | 3. | - | Residual heat: 30 |
| Vegetables, e.g. cucumbers | 1-litre preserving jars | 1 | | 1. | 160-170 | Before it starts bubbling: 30-40 |
| | | | | 2. | - | Residual heat: 30 |
| Stone fruit, e.g. cherries, damsons | 1-litre preserving jars | 1 | | 1. | 160-170 | Before it starts bubbling: 30-40 |
| | | | | 2. | - | Residual heat: 35 |
| Pomes, e.g. apples, strawberries | 1-litre preserving jars | 1 | | 1. | 160-170 | Before it starts bubbling: 30-40 |
| | | | | 2. | - | Residual heat: 25 |

## Prove dough

Your yeast dough will prove considerably more quickly using this heating function than at room temperature and will not dry out. Do not start the appliance if the cooking compartment is not completely cool.

Always allow yeast dough to prove twice.Use the settings indicated in the settings tables for the first and second proving stages (dough fermentation stage and final fermentation stage).

**Dough fermentation**
Place the dough into a heat-resistant bowl and place this onto the wire rack. Use the settings indicated in the table.

Do not open the appliance door while the dough is proving, otherwise moisture will escape. Do not cover the dough.

Condensation builds up during the proving process, which steams up the door panel. Wipe out the cooking compartment after dough proving.Remove any limescale with a little vinegar and wipe with clean water.

**Final fermentation**
Place your dough into the oven at the shelf position indicated in the table.

If you want to preheat the oven, the final fermentation stage takes place outside the appliance in a warm place.

The temperature and proving time are dependent on the type and quantity of the ingredients. For this reason, the values indicated in the settings table are intended as a guide only.

| Dish | Accessories/cookware | Shelf posi-tion | Type of heating | Step | Tempera-ture in °C | Cooking time in mins |
|---|---|---|---|---|---|---|
| Yeast dough, light | Bowl | 2 | | 1. | 35-40 | 25-30 |
| | Baking tray | 2 | | 2. | 35-40 | 10-20 |
| Yeast dough, heavy and rich | Bowl | 2 | | 1. | 35-40 | 60-75 |
| | Heat-resistant cookware | 2 | | 2. | 35-40 | 45-60 |

## Defrosting

For defrosting frozen fruit, vegetables and baked items. Poultry, meat and fish should ideally be defrosted in the refrigerator. Not suitable for cream cakes or cream gateaux.

Use the following shelf positions when defrosting:
- 1 wire rack: Position 2
- 2 wire racks: Positions 3 + 1

The times indicated in the table are intended as a guide only.They are dependent on the quality, freezing temperature (-18 °C) and composition of the food. Time ranges are indicated.Set the shortest time to begin with, and then extend the time if necessary.

**Tip:** Food that has been frozen in thinner pieces or in portions defrosts more quickly than food items frozen in a block.

Remove frozen food from its packaging and place it onto the wire rack in suitable cookware.

Redistribute the food or turn it once or twice as it defrosts. Large pieces of food should be turned several times.As the food defrosts, break up any clumps and remove items which have already defrosted from the cooking compartment.

To allow the temperature to equalise, leave the defrosted food to rest for another 10 to 30 minutes in the appliance after switching it off.

| Dish | Accessories/cookware | Shelf position | Heating function | Temperature in °C | Cooking time in mins |
|---|---|---|---|---|---|
| Bread, general | Baking tray | 2 | | 50 | 40-70 |
| Cake, moist | Baking tray | 2 | | 50 | 70-90 |
| Cake, dry | Baking tray | 2 | | 60 | 60-75 |

## Keeping warm

You can keep cooked dishes warm using the top/bottom heating type at 70 °C. This will avoid condensation developing, and means you will not have to wipe out the cooking compartment.

Do not keep cooked dishes warm for longer than two hours. Be aware that some dishes may continue cooking whilst being kept warm. Cover the dishes if necessary.

## Test dishes

These tables have been produced for test institutes to facilitate appliance testing.

As per EN 60350-1.

### Baking

Items that are placed in the oven on baking trays or in baking tins/dishes at the same time will not necessarily be ready at the same time.

Shelf positions for baking on two levels:
- Universal pan: Position 3
  Baking tray: Position 1
- Baking tins/dishes on the wire rack
  First wire rack: Position 3
  Second wire rack: Position 1

Shelf positions for baking on three levels:
- Baking tray: Position 5
- Universal pan: Position 3
- Baking tray: Position 1

Baking with two springform tins:
- On one level (figure 1)
- On two levels (figure 2)

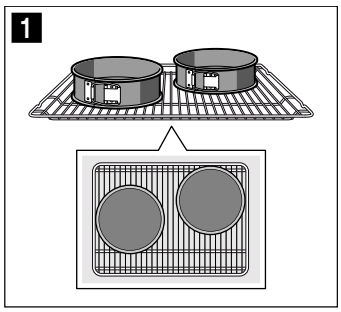


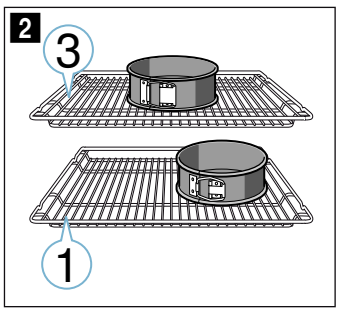


### Notes

- The setting values apply to dishes placed into a cold cooking compartment.
- Please note the information in the tables about preheating. The setting values are valid without rapid heating-up.
- For baking, use the lower of the indicated temperatures first.

### Grilling

Also slide in the universal pan. The liquid will be caught and the cooking compartment stays cleaner.

### Baking

| Food | Dish | Shelf position | Type of heating | Temperature in °C / Grill setting | Time in minutes |
|---|---|---|---|---|---|
| Shortbread | Baking tray | 3 | | 140 - 150** | 25 - 35 |
| Shortbread | Baking tray | 3 | | 140 - 150** | 20 - 30 |
| Shortbread, 2 levels | Universal pan + Baking tray | 3+1 | | 140 - 150** | 25 - 35 |
| Shortbread, 3 levels | Baking trays + universal pan | 5+3+1 | | 130 - 140** | 35 - 55 |
| Small Cakes | Baking tray | 3 | | 150** | 25 - 35 |
| Small Cakes | Baking tray | 3 | | 140** | 25 - 35 |
| Small Cakes, 2 levels | Universal pan + Baking tray | 3+1 | | 140** | 30 - 40 |
| Small Cakes, 3 levels | Baking trays + universal pan | 5+3+1 | | 140** | 30 - 40 |
| Fatless sponge cake | 26 cm springform cake tin | 2 | | 160 - 170* | 25 - 35 |
| Fatless sponge cake | 26 cm springform cake tin | 2 | | 160 - 170 | 30 - 35 |
| Fatless sponge cake, 2 levels | 26 cm springform cake tin | 3+1 | | 150 - 160* | 35 - 50 |
| Double-crusted apple pie | 2 x 20 cm black cake tins | 2 | | 160 - 180 | 65 - 85 |
| Double-crusted apple pie | 2 x 20 cm black cake tins | 1 | | 190 - 210 | 60 - 70 |
| Double-crusted apple pie, 2 levels | 2 x 20 cm black cake tins | 3+1 | | 170 - 190 | 60 - 90 |
| Grilling white bread | Wire rack | 5 | | 3**** | 5-6 |
| Beef burger, 12 pieces | Wire rack | 4 | | Int/^^^ | 25 - 30*** |

* Preheat; do not use rapid heat-up function.
** Preheat 5 mins; do not use rapid heat-up function.
*** Turn after 2/3 of total time
**** Do not preheat

## Thank you for buying a Bosch Home Appliance!

Register your new device on MyBosch now and profit directly from:

- **Expert tips & tricks for your appliance**
- **Warranty extension options**
- **Discounts for accessories & spare-parts**
- **Digital manual and all appliance data at hand**
- **Easy access to Bosch Home Appliances Service**

Free and easy registration – also on mobile phones:
**www.bosch-home.com/welcome**

## Looking for help? You´ll find it here.

Expert advice for your Bosch home appliances, need help with problems or a repair from Bosch experts.
Find out everything about the many ways Bosch can support you:
**www.bosch-home.com/service**
**Contact data of all countries are listed in the attached service directory.**

**Robert Bosch Hausgeräte GmbH**
Carl-Wery-Straße 34
81739 München
Germany
**www.bosch-home.com**

9001292123
980228