Contents

1 Instructions 40

1.1 General safety instructions 40
1.2 Instructions for using microwaves 41
1.3 Manufacturer liability 43
1.4 Appliance purpose 43
1.5 Identification plate 43
1.6 Disposal 43
1.7 This user manual 44
1.8 How to read the user manual 44

2 Description 45

2.1 General Description 45
2.2 Control panel 46
2.3 Other parts 47
2.4 Microwaves 47
2.5 Available accessories 48

3 Use 49

3.1 Instructions 49
3.2 First use 51
3.3 Using the accessories 51
3.4 Using the oven 52
3.5 Cooking functions 54
3.6 Special functions 60
3.7 Secondary menu 63

4 Cleaning and maintenance 66

4.1 Instructions 66
4.2 Cleaning the surfaces 66
4.3 Ordinary daily cleaning 66
4.4 Food stains or residues 67
4.5 Drying 67
4.6 Cleaning the door glazing 67
4.7 Cleaning the inside of the oven 67

5 Installation 70

5.1 Electrical connection 70
5.2 Positioning 71

EN

TRANSLATION OF THE ORIGINAL INSTRUCTIONS

We advise you to read this manual carefully, which contains all the instructions for maintaining the appliance's aesthetic and functional qualities.

For further information on the product: www.smeg.com

1 Instructions

IMPORTANT SAFETY INSTRUCTIONS
PLEASE READ CAREFULLY AND RETAIN FOR FUTURE USE.

1.1 General safety instructions

Risk of personal injury

- WARNING: If the door or the door seal is damaged, the oven must not be used until it has been repaired by a competent person.
- WARNING: It is hazardous for anyone other than a competent person to carry out any service or repair operation which involves the removal of a cover which offers protection against exposure to microwave energy.
- WARNING: Liquids and other foods must not be heated in sealed containers since they are liable to explode.
- WARNING: During use the appliance and its accessible parts become very hot.
- Never touch the heating elements during use.
- Keep children under eight years of age at a safe distance if they are not constantly supervised.
- This appliance may be used by children aged at least 8 and by people of reduced physical and mental capacity, or lacking in experience in the use of electrical appliances, as long they are supervised or instructed by adults who are responsible for their safety.
- Children must never play with the appliance.
- The appliance must never be cleaned by unsupervised children.
- Switch off the appliance immediately after use.
- If smoke is emitted, switch off or unplug the appliance and keep the door closed in order to stifle any flames.
- Never attempt to extinguish a flame or fire with water.
- Have qualified personnel carry out installation and assistance interventions according to the standards in force.
- Do not modify this appliance.
- Do not insert pointed metal objects (cutlery or utensils) into the

slots in the appliance.

- Do not try to repair the appliance yourself or without the intervention of a qualified technician.
- If the power supply cable is damaged, contact technical support immediately and they will replace it.

Risk of damaging the appliance

- Do not use abrasive or corrosive detergents on glass parts (e.g. powder products, stain removers and metallic sponges).
- Use wooden or plastic utensils.
- Do not use a steam jet to clean the appliance.
- Do not obstruct ventilation openings and heat dispersal slots.
- Never leave the appliance unattended during cooking operations where fats or oils could be released.
- Do not use the appliance to heat rooms for any reason.
- Do not rest any weight or sit on the open door of the appliance.
- Take care that no objects are stuck in the doors.

1.2 Instructions for using microwaves

- Check the appliance visually during the cooking of foods in plastic or paper containers.

Improper use
Danger of explosion

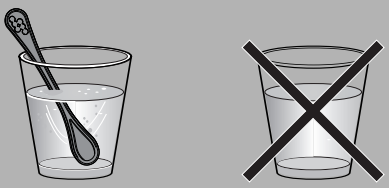

- When using the microwave to heat or reheat liquids, the boiling process may be delayed – boiling temperature can be reached without the formation of the usual "rolling boil". This delayed boiling and consequent superheating of the liquid can generate an explosion inside the appliance, or sudden boiling over of the superheated liquid can occur when removing the container from the appliance. To avoid these dangers, it is necessary to insert the supplied boiling rod (or a heat-resistant plastic spoon) in the container while heating.

- Use the microwave only for the preparation of food for consumption. Other types of applications are strictly forbidden

EN

(e.g. drying clothes, warming slippers, sponges, wet cloths or the like, dehydrating foods) because they can lead to the risk of injury or fire.

- Clean the appliance constantly and remove any food residue.
- Do not use the microwave to dry food.
- Do not use the microwave to heat oils or fry.
- Do not use the appliance to heat foods or beverages containing alcohol.
- Baby food should not be heated in sealed containers. Remove the cover or the teat (in the case of baby bottles). Always check the preparation's temperature once heating has completed, it should not be too high. For an even temperature and to avoid scalding stir or shake the contents.
- Do not heat eggs in their shells or whole hard boiled eggs; they may explode even after the heating process has completed.
- Before cooking food with a hard skin or peel (e.g. potatoes, apples, etc.) it is necessary to puncture the skin.
- Do not heat food contained within food packages.
- Do not use the microwave functions when the oven is empty.
- Use cookware and utensils that are suitable for use in a microwave oven.
- Do not use aluminium containers to cook food.
- Do not use dishes with metallic decorations (gold-plated or silver).
- The appliance operates in the 2.4GHz ISM band.
- In compliance with the provisions relating to electromagnetic compatibility the appliance belongs to group 2 and class B (EN 55011).
- This appliance complies with the standards and directives currently in force concerning safety and electromagnetic compatibility. It is however recommended for pacemaker wearers to maintain a minimum distance of 20-30cm between the microwave when it is operating and the pacemaker. Consult the pacemaker manufacturer for more information.

1.3 Manufacturer liability

The manufacturer declines all liability for damage to persons or property caused by:

- Use of the appliance other than the one envisaged;
- Non-observance of the user manual provisions;
- Tampering with any part of the appliance;
- Use of non-original spare parts.

1.4 Appliance purpose

- This appliance is intended for cooking food in the home environment. Every other use is considered inappropriate. It cannot be used:
  - in employee kitchens, shops, offices and other working environments.
  - in farms/agritourism establishments.
  - by guests in hotels, motels and residential environments.
  - in bed and breakfast establishments.
- The appliance is not designed to operate with external timers or with remote-control systems.

1.5 Identification plate

The identification plate bears the technical data, serial number and brand name of the appliance. Do not remove the identification plate for any reason.

1.6 Disposal

This appliance must be disposed of separately from other waste (Directives 2002/95/EC, 2002/96/EC, 2003/108/EC). The appliance does not contain substances in quantities sufficient to be considered hazardous to health and the environment, in accordance with current European directives.

Power voltage
Danger of electrocution

- Disconnect the main power supply.
- Disconnect the power cable from the electrical system.

To dispose of the appliance:

- Cut the power supply cable and remove it along with the plug (if present).
- Deliver the appliance to the appropriate recycling centre for electrical and electronic equipment waste, or return it to the retailer when purchasing an equivalent product, on a one for one basis.

Our appliances are packed in non-polluting and recyclable materials.

- Deliver the packing materials to the appropriate recycling centre.

Plastic packaging
Danger of suffocation

- Do not leave the packaging or any part of it unattended.
- Do not let children play with the packaging plastic bags.

1.7 This user manual

This user manual is an integral part of the appliance and must therefore be kept in its entirety and within the user's reach for the whole working life of the appliance.

- Read this user manual carefully before using the appliance.

1.8 How to read the user manual

This user manual uses the following reading conventions:

Instructions

General information on this user manual, on safety and final disposal.

Description

Description of the appliance and its accessories.

Use

Information on the use of the appliance and its accessories, cooking advice.

Cleaning and maintenance

Information for proper cleaning and maintenance of the appliance.

Installation

Information for the qualified technician: Installation, operation and inspection.

Safety instructions

Information

Advice

1. Use instruction sequence.

- Single use instruction.

2 Description

2.1 General Description

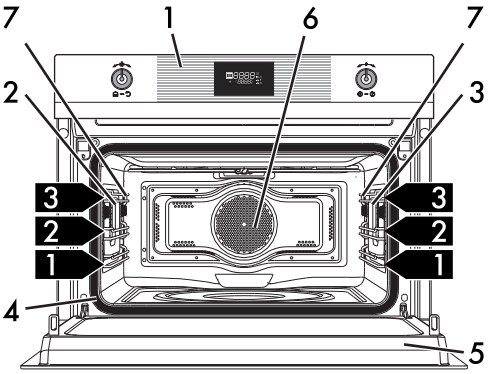

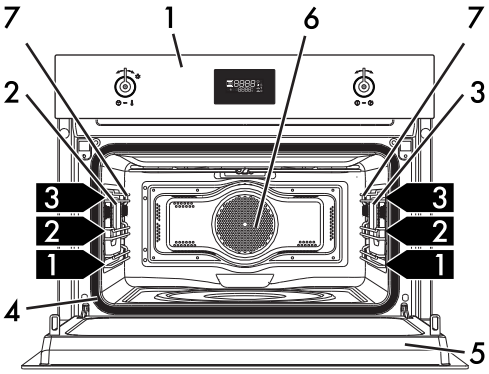

1 Control panel
2 LH light bulb
3 RH light bulb (on some models only)
4 Seal
5 Door
6 Oven fan
7 Rack/tray support frames
1,2,3.. Frame shelf

2.2 Control panel

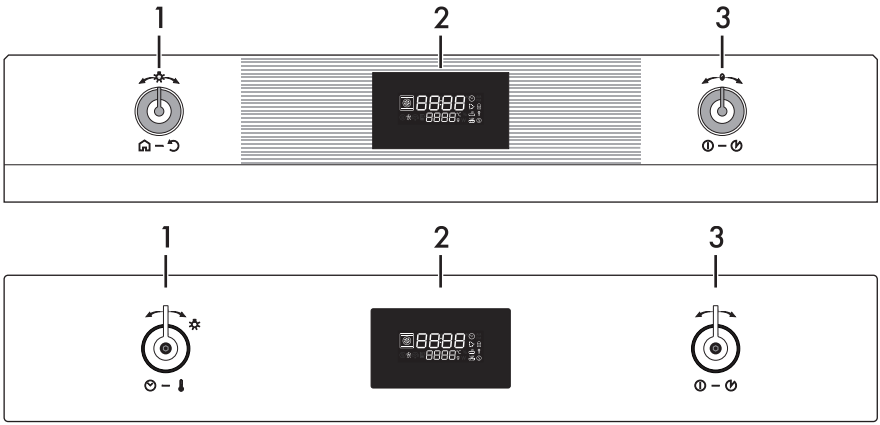

1 Temperature knob

This knob is used to select:

- Microwave power level
- Cooking temperature
- Function duration
- Programmed cooking procedures
- Current time
- Switching on or off of the appliance internal lamp.

2 Display

Displays the current time, the selected cooking function, power and temperature and any time set.

3 Function knob

This knob can be used to:

- Turn the appliance on and off
- Select a function
- Temporarily start or stop a function.

2.3 Other parts

Shelves

The appliance features shelves to position trays and racks at different heights. The insertion heights are indicated from the bottom upwards (see 2.1 General Description).

Cooling fan

The fan cools the oven and comes into operation during cooking.

The fan causes a steady outflow of air from above the door which may continue for a brief period of time even after the appliance has been turned off.

Interior lighting

The appliance's interior lighting comes on:

- When the door is opened (on some models only)
- When any function is selected
- When no function is selected, turn the programming knob briefly to the right to activate or deactivate internal lighting.

In order to save energy, the light turns off after a minute at the start of cooking (this function can be deactivated via the secondary menu).

When the door is open, it is not possible to turn the internal lighting off (on some models only).

2.4 Microwaves

The appliance is equipped with a microwave generator called a magnetron. The microwaves generated are evenly emitted into the oven cavity in order to reach the food and heat it.

Heating takes place through the process of friction between the molecules contained within the food (mainly water molecules), with the consequent generation of heat.

The heat generated directly inside the food allows defrosting, re-heating or cooking in a shorter length of time compared to traditional cooking.

The use of suitable containers for microwave cooking allows the microwaves to reach the food in a uniform manner (see Materials suitable for microwaves).

2.5 Available accessories

Some models are not provided with all accessories.

Rack

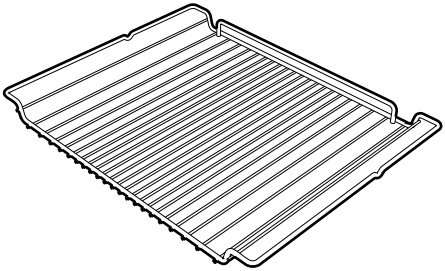

Used for supporting containers with food during cooking.

Boiling rod

To be placed in containers when heating liquids, necessary to avoid delayed boiling.

The oven accessories intended to come into contact with food are made of materials that comply with the provisions of current legislation.

Original supplied and optional accessories can be requested to Authorised Assistance Centres. Use only original accessories supplied by the manufacturer.

3 Use

3.1 Instructions

High temperature during use
Danger of burns

- Keep the oven door closed during cooking.
- Protect your hands wearing heat resistant gloves when moving food inside the oven.
- Do not touch the heating elements inside the oven.
- Do not pour water directly onto very hot trays.
- Do not allow children to approach the oven when it is in operation.

High temperature during use
Danger of fire or explosion

- Do not spray any spray products near the oven.
- Do not use or leave flammable materials near the oven.
- Do not use plastic kitchenware for cooking food (except with the microwave function).
- Do not put sealed tins or containers in the oven.
- Do not leave the oven unattended during cooking operations where fats or oils could be released.
- Remove all trays and racks which are not required during cooking.

Improper use
Risk of damage to surfaces

- Do not cover the bottom of the oven cavity with aluminium or tin foil sheets.
- If you wish to use greaseproof paper, place it so that it will not interfere with the hot air circulation inside the oven.
- Do not bang or drag cookware over the glazed bottom of the oven cavity.
- Do not pour water directly onto very hot trays.

EN

Materials suitable for microwaves

In general, in order for all of the food to be reached, the materials used for microwave cooking must be transparent to microwave energy.

Below is a table of materials to use and those not to use:

MATERIALS TO USE	
Glass*	
• Baking ware • Glasses • Glass jars	Always remove the covers.
Porcelain	
Ceramic	
Plastic*	Only where suitable for microwave use.
• Containers • Plastic wrap	Where film is used it must not come into contact with the food.

*only if heat-resistant

NOT TO BE USED	
Metal • Aluminium foil • Aluminium trays • Plates • Metal utensils • Freezer bags tie wraps	These can lead to arcing or sparks.
Wood	
Crystal glasses	
Paper	Risk of fire.
Expanded polystyrene containers	Risk of food contamination.

*only if heat-resistant

Dishes must be free of metal decorations.

Do not use metal accessory trays in the microwave or combined microwave functions.

Testing dishes

The microwave function can be used without any food inside the oven only for this test.

To check whether or not cookware is suitable for use with microwave cooking carry out this simple test:

1. Remove all accessories from the oven cavity.
2. Place the cookware to be tested on the rack inserted in the first runner.
3. Select the maximum power level (e.g. 1000W).
4. Set a cooking time of 30 seconds.
5. Start cooking.

Unsuitable cookware
Risk of damage to the appliance

- If there is crackling or if sparks are emitted from the cookware then immediately terminate the test. In this instance the cookware is not suitable for microwave cooking.

6. At the end of the test the cookware must be either cold or slightly warm. If the cookware is hot then it should be considered as unsuitable for microwave use.

3.2 First use

1. Remove any protective film from the outside or inside of the appliance, including accessories.
2. Remove any labels (apart from the technical data plate) from the accessories and from the oven cavity.
3. Remove and wash all the appliance accessories (see 4 Cleaning and maintenance).
4. Heat the empty oven at maximum temperature (using the traditional functions) so as to remove any manufacturing residues.

For the first reheating use a traditional function and not a microwave function.

3.3 Using the accessories

Racks and trays

High temperature
Danger of burns

- This accessory gets very hot. Always use oven gloves when handling.

Racks and trays have to be inserted into the side guides until they come to a complete stop.

- The mechanical safety locks that prevent the rack from being taken out accidentally must face downwards and towards the back of the oven.

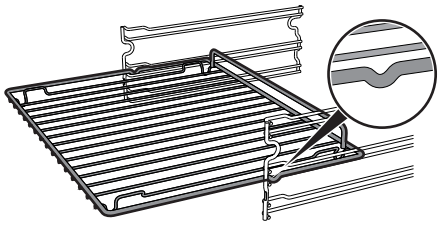

Gently insert racks and trays into the oven until they come to a stop.

Clean the trays before using them for the first time to remove any residues left by the manufacturing process.

Boiling rod

Improper use
Danger of explosion/burns

- To avoid the danger of explosion inside the appliance or the sudden boiling over of superheated liquids, it is always necessary to immerse the boiling rod in the liquid being heated.

High temperature
Risk of damage to the accessory

- Use the boiling rod only with Microwave functions. The rod must not be used with combination and traditional functions.

When using microwaves to heat or reheat liquids, the boiling process may be delayed while the liquids nevertheless exceed 100 degrees. To avoid this, place the boiling rod provided (or a heat-resistant plastic spoon) into the container while heating.

3.4 Using the oven

Display

Clock indicator light

Minute minder timer indicator light

Programmed cooking indicator light

Timed cooking indicator light

Child lock indicator light

Showroom indicator light

Microwave indicator light

Operating modes

Stand-by: When no function is selected, the display shows the current time and the symbol.

ON: When any function has been started, the display shows the current settings such as temperature, duration, microwave power level and the temperature level reached.

Each time the temperature knob is pressed during the operation of a function the parameters will be cycled through in the following order.

For each parameter the setting can be altered by turning the temperature knob to the right or left. Keep the knob turned to produce a faster increase or decrease.

If a microwave function has been selected:

1. Microwave power level.
2. Function duration.

If a Microwave + Grill function has been selected:

1. Temperature.
2. Function duration.
3. Microwave power level.

If a Grill function has been selected:

1. Temperature
2. Minute minder timer duration.
3. Function duration.
4. Programmed cooking duration (if timed cooking has been selected).
5. Time display.

Setting the time

On the first use, or after a power failure, will be flashing on the appliance's display. To be able to start any cooking function, the current time must be set.

1. Turn the temperature knob to set the hour displayed (to increase or a decrease more quickly keep the knob turned to the right or left).
2. Press the temperature knob.
3. Turn the temperature knob to set the minutes displayed (to increase or a decrease more quickly keep the knob turned to the right or left).
4. To confirm the settings press the temperature knob.

It may become necessary to change the current time, for example for daylight saving time. From stand-by mode keep the temperature knob turned to the right or left until the hour value flashes.

It is not possible to change the time if the oven is ON.

EN

3.5 Cooking functions

Improper use
Risk of damage to the appliance

When using the microwave functions, food must be placed in a suitable container on the rack inserted in the first runner.

DO NOT USE CONTAINERS/ ACCESSORIES (trays, glass dishes, etc.) PLACED DIRECTLY ON THE FLOOR OF THE OVEN.

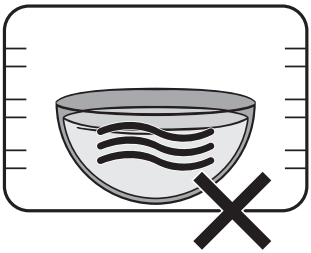

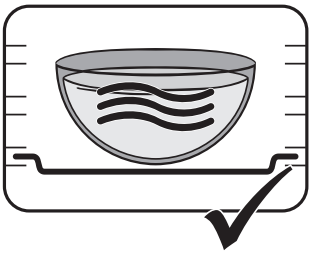

For perfect results with long microwave and combination cooking functions, food should be stirred once or twice during cooking.

Microwave:

1. Press/turn the function knob to select the microwave function .
2. Press the temperature knob.
3. Turn the temperature knob to change the cooking time (max 30 minutes).
4. Press the temperature knob.
5. Turn the temperature knob to change the power level from 100W to 1000W (see Microwave power levels).
6. Press the temperature knob or wait 3 seconds.
7. Press the function knob to start microwave cooking.

If the door is opened then cooking will stop. Once the door is closed press the function knob to resume cooking.

Press the function knob to temporarily stop the cooking function. Press it again to resume cooking.

8. At the end of the cooking time the display will indicate the word Stop.

To extend the cooking time manually, press the function knob again. The appliance will resume its normal operation with the previously selected cooking settings.

To turn off the appliance press and hold the function knob.

Microwaves

Given that they penetrate directly into the food, microwaves allow cooking to take place in a very short period of time and with a considerable saving of energy. They are suitable for cooking without fat and also for defrosting and re-heating food while maintaining its original appearance and fragrance.

Microwave power levels

Below is a list of the power levels that can be selected:

Power (W)	Useful for
100 200 300	Defrosting food
400 500	Cooking meat or delicate cooking
600 700 800	Re-heating and cooking food
900 1000	Heating liquids

QUICK START microwave function

The QUICK START function allows the microwave to be started quickly. This is useful for heating small quantities of liquid or food.

1. From stand-by mode press the function knob twice.

2. The appliance will start the microwave oven with the default settings.

EN

Combination Microwave + grill function

Combination cooking is a mix of traditional cooking and microwave operation.

Microwave + Grill

The use of the grill results in perfect browning of the food's surface. Using the microwave on the other hand leads to rapid internal cooking of the food.

1. Press/turn the function knob to select the Microwave+Grill function.
2. Press the temperature knob.
3. Turn the knob to set the temperature.
4. Press the temperature knob.
5. Turn the temperature knob to change the cooking time.
6. Press the temperature knob.
7. Turn the temperature knob to change the power level (from 100W to 700W).
8. Press the temperature knob or wait 3 seconds.
9. Press the function knob to start combination cooking.

Improper use

Risk of damage to the appliance

- Do not use the combination functions to heat or boil liquids.

Grill Function

Grill

The heat coming from the grill element gives perfect grilling results above all for thin and medium thickness meat and allows you to give the food an even browning at the end of the cooking. Perfect for sausages, spare ribs and bacon. This function enables large quantities of food, particularly meat, to be grilled evenly.

1. Press/turn the function knob to select the Grill function.
2. Press the temperature knob.
3. Turn the knob to set the temperature.
4. Press the temperature knob or wait 3 seconds.
5. Press the function knob to start cooking.

EN

Pre-heating stage

In the grill function, cooking itself is preceded by a preheating stage, which allows the oven to heat to the cooking temperature more quickly.

This stage is indicated by the flashing of the °C symbol.

At the end of the preheating stage the °C symbol remains steady and a buzzer sounds to indicate that food can be placed into the oven.

Cooking can be stopped at any time by pressing and holding the function knob for at least 3 seconds.

Timer

This function only activates the buzzer, without stopping cooking.

The minute minder can be activated both during cooking and when the appliance is in standby.

1. Press the temperature knob once (twice if cooking is already in progress). The display shows 00:00 and the indicator light flashes.

2. Turn the temperature knob to set the duration (from 1 minute to 4 hours).
   After a few seconds, the indicator light stops flashing and the countdown starts.
3. Select the grill function and wait for the buzzer to sound, indicating that the cooking time is over. The indicator light flashes.
4. Turn the knob to select an additional minute minder. Or else press the temperature knob to stop the buzzer.

Timed cooking (only for grill function)

Timed cooking is the function which allows a cooking operation to be started and then ended after a specific length of time set by the user.

Activation of timed cooking cancels any minute minder timer which may previously have been set.

1. After selecting a cooking function and temperature, press the temperature knob three times. The display shows 00:00 and the indicator light flashes.

2. Turn the temperature knob to set the cooking time from 00:01 to 13:00. Keep the knob turned to produce a faster increase or decrease.

3. A few seconds after the required duration has been set, the indicator light stops flashing and timed cooking starts.
4. At the end of the cooking cycle, STOP appears on the display and a buzzer sounds that can be deactivated by opening the door or pressing/turning one of the two knobs.

To select an additional timed cooking period turn the temperature knob to the right or left.

To extend the cooking time manually, press the temperature knob again. The appliance will resume its normal operation with the previously selected cooking settings.

To turn off the appliance press and hold the function knob.

EN

Programmed cooking (only for grill function)

Programmed cooking refers to the function that allows cooking to be stopped automatically at a time set by the user, after which the oven will switch off automatically.

1. After selecting a cooking function and temperature, press the temperature knob three times. The display shows 00:00 and the indicator light flashes.

2. Turn the knob to set the cooking time from 00:01 to 13:00. Keep the knob turned to increase or decrease it more quickly.

3. Press the temperature knob a fourth time. The indicator light flashes. Turn the knob to set the cooking end time.

4. After a few seconds, the and indicator lights stop flashing. The appliance waits for the set start time.

5. At the end of the cooking cycle, STOP appears on the display and a buzzer sounds that can be deactivated by opening the door or pressing/turning one of the two knobs.

To extend the cooking time manually, press the temperature knob again. The appliance will resume its normal operation with the previously selected cooking settings.

To turn off the appliance press and hold the function knob.

For safety reasons, it is not possible to set the end of cooking time by itself without setting the cooking duration.

3.6 Special functions

Reheat

This function is for microwave re-heating of food that has been previously cooked and stored in the refrigerator.

1. Press/turn the function knob to select the re-heating function.
2. Press the temperature knob.
3. Turn the temperature knob to change the re-heating time.
4. Press the function knob to confirm the settings and start re-heating.
5. On completion the word Stop will be displayed.

EN

Defrost by time

This function allows food to be defrosted by the microwave according to a selected period of time.

1. Place the dish into the oven compartment (see "Turn" procedure).
2. Press/turn the function knob to select timed defrosting indicated by the ❄ and ≋ symbols.
3. Press the temperature knob to change the defrosting time.
4. Turn the knob to set the defrosting time (from 5 minute up to 99 hours).
5. Press the function knob to start defrosting.

If the selected defrost duration is more than 5 minutes then, for best results, the dish inside the oven compartment will need to be turned. See: "Turn" procedure.

6. On completion the word Stop will be displayed.

Defrost by weight

This function allows food to be microwave defrosted according to the weight and type of food to be defrosted.

1. Place the dish into the oven compartment (see "Turn" procedure).
2. Press/turn the function knob to select the defrost by weight function indicated by d00.
3. Turn the function knob to select the type of food to be defrosted.
4. Turn the temperature knob to select the weight (in grams) of the food to be defrosted.
5. Press the function knob to confirm the settings and start defrosting.

For best results during defrosting the dish inside the oven will need to be turned. See: "Turn" procedure.

6. On completion the word Stop will be displayed.

Pre-set parameters:

dE	Type	Weight (g)	Time (minutes)
d01	Meat	500	20
d02	Fish	400	17
d03	Fruit	300	15
d04	Bread	300	5

"Turn" procedure

For best defrosting results it is recommended, when necessary, to turn the dish inside the oven cavity.

1. Put the dish in the oven, placing it parallel to the door.

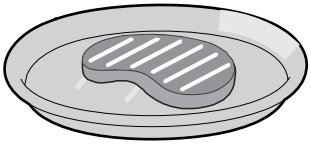

2. When the word "Turn" is displayed it is necessary to turn the dish.

3. Open the door and turn the dish 90°.

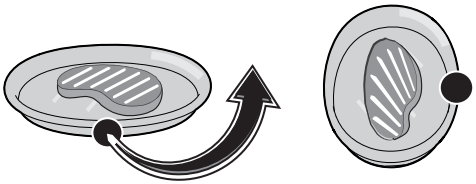

If dish rotation is not performed the appliance will wait for one minute and then automatically continue defrosting. As a reminder the word "Turn" will remain displayed beneath the countdown indication.

4. Close the door and press the function knob to resume operation.
5. If necessary the appliance will again ask for rotation of the dish. The word "Turn" will be displayed.
6. For the second rotation the door will need to be opened and the dish turned by 180°.

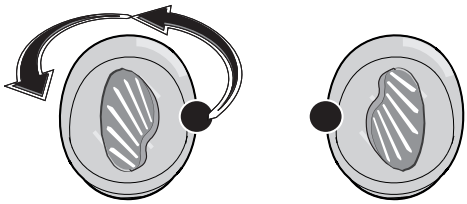

7. Close the door and press the function knob to resume operation.

3.7 Secondary menu

The appliance also has a drop-down secondary menu allowing the user to:

- Activate or deactivate the Child lock.
- Activate or deactivate Showroom mode (which disables all the heating elements so that only the control panel works).
- Activate or deactivate Low power mode (Eco-Logic).
- Activate or deactivate internal lamp timed mode (Eco-Light).

With the appliance in Stand-By mode

1. Activate the internal light by turning the temperature knob quickly.
2. Press and hold the temperature knob down for at least 5 seconds.
3. Turn the temperature knob right or left to change the setting status (ON/OFF).
4. Press the temperature knob to move to the next mode.

Child Lock mode: This mode allows the appliance to lock the controls automatically after one minute of normal operation without any intervention from the user.

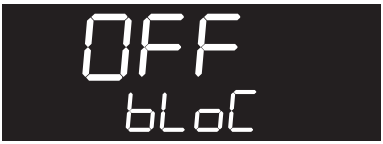

During normal operation it is indicated by the indicator light switching on.

To release the lock temporarily during cooking, keep the programming knob pressed for 5 seconds. One minute after the last setting the lock will become active again.

Touching or varying the position of the temperature and function knobs will cause bLoC to appear on the display for two seconds.

Even with the child lock mode activated the appliance can be turned off instantly by pressing the function knob for 3 seconds.

Showroom mode (for exhibitors only): This mode allows the appliance to deactivate the heating elements while keeping the control panel active.

To use the appliance normally, set this mode to OFF.

If the mode is active, the Ⓢ indicator light lights up on the display.

Low Power mode: This mode allows the appliance to limit the power used.

Suitable for use at the same time as other household appliances.

HI: normal power.

LO: low power.

Activating low power mode means that preheating and cooking times may be extended.

Internal lamp timed mode

For greater energy savings, the light is turned off automatically one minute after the start of cooking.

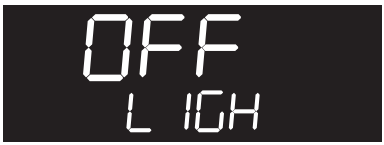

To prevent the appliance from automatically turning the internal lamp off turn this mode to OFF.

The manual on/off control is always available in both settings by turning the return knob to the right.

EN

4 Cleaning and maintenance

4.1 Instructions

High temperature inside the oven during use
Danger of burns

- Perform cleaning only after letting the appliance cool down.

Improper use
Risk of damage to surfaces

- Do not use steam jets to clean the appliance.
- Do not use cleaning products containing chlorine, ammonia or bleach on parts made of steel or that have metallic surface finishes (e.g. anodizing, nickel- or chromium-plating).
- Do not use abrasive or corrosive detergents (e.g. scouring powders, stain removers and metallic sponges) on glass parts.
- Do not use rough or abrasive materials or sharp metal scrapers.
- Failure to clean the oven could adversely affect the life of the appliance and pose a hazard.
- Always remove food residues from the oven cavity.

Improper use
Danger of explosion/burns

- Do not use detergents with high alcohol content or which can release inflammable vapours. Subsequent heating could set off an explosion inside the appliance.

If a lamp is damaged, contact Technical support for a replacement. This fault will not affect the integrity of the appliance which can continue to be used.

4.2 Cleaning the surfaces

To keep the surfaces in good condition, they should be cleaned regularly after use. Let them cool first.

4.3 Ordinary daily cleaning

Always use only specific products that do not contain abrasives or chlorine-based acids.

Pour the product onto a damp cloth and wipe the surface, rinse thoroughly and dry with a soft cloth or a microfibre cloth.

4.4 Food stains or residues

Do not use steel sponges and sharp scrapers, as they will damage the surfaces.

Use ordinary non-abrasive products with the aid of wooden or plastic utensils if necessary. Rinse thoroughly and dry with a soft cloth or a microfibre cloth.

Do not allow residues of sugary foods (such as jam) to set inside the oven. If left to set for too long, they might damage the enamel lining of the oven.

4.5 Drying

Cooking food generates moisture inside the appliance. This is a normal phenomenon and does not affect the appliance's operation in any way.

Each time you finish cooking:

1. Let the appliance cool down.
2. Remove any dirt from inside the appliance.
3. Dry the interior of the appliance with a soft cloth.
4. Leave the door open until the inside of the appliance has dried completely.

4.6 Cleaning the door glazing

The glass in the door should always be kept thoroughly clean. Use absorbent kitchen roll. In case of stubborn dirt, wash with a damp sponge and an ordinary detergent.

We recommend the use of cleaning products distributed by the manufacturer.

4.7 Cleaning the inside of the oven

For the best oven upkeep, clean it regularly after having allowed it to cool.

Take out all removable parts.

Clean the oven racks with warm water and non-abrasive detergents. Carefully rinse and dry damp parts.

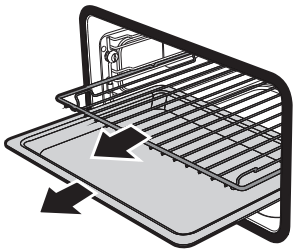

The oven should be operated at the maximum temperature for about 15-20 minutes after the use of specific products, to burn off the residues left inside the oven.

Removing racks/trays support frames

Removing the guide frames enables the sides to be cleaned more easily. This operation should be performed each time the automatic cleaning cycle is used (on some models only).

To remove the guide frames:

1. Unscrew the two fastening pins of the frame.

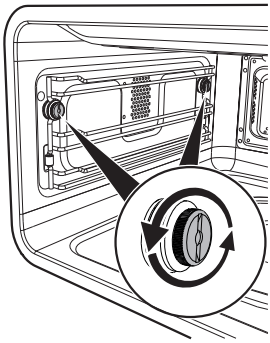

2. Pull the frame towards the inside of the oven.

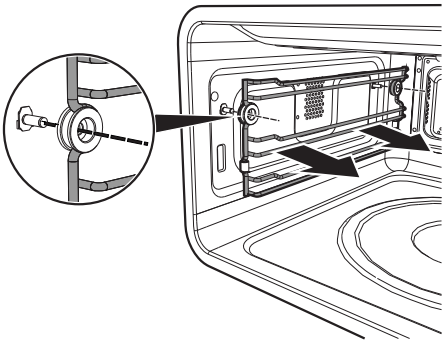

3. When cleaning is complete, repeat the above procedures to put the guide frames back in. Pay attention to the spacer bushings which need to be inserted correctly into the frames.

Cleaning the top section

High temperature inside the oven during use
Danger of burns

- The following operations must only be carried out when the oven is completely cold and switched off.

The appliance is fitted with a tilting heating element that makes it easier to clean the top part of the oven.

1. Release the upper heating element by gently lifting it and rotating its retaining latch by 90 degrees.

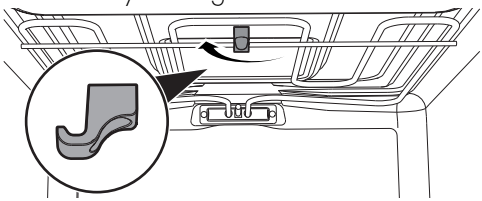

2. Gently lower the heating element until it stops.

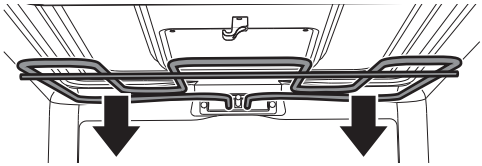

Improper use
Risk of damage to the appliance

- Do not excessively flex the element during cleaning.

3. When you have finished cleaning, place the heating element back in position and turn the retaining latch to lock it in place.

EN

What to do if...

The display is completely off:

- Check the mains power supply.
- Check whether an omnipolar breaker on/upline of the appliance supply line is in the "ON" position.

The appliance does not heat up:

- Check whether it has been set in "showroom" mode (for further details see 3.7 Secondary menu).

The controls do not respond:

- Check whether it has been set in "child lock" mode (for further details see 3.7 Secondary menu).

The cooking times are longer than those indicated in the table:

- Check whether it has been set in "eco-logic" mode (for further details see 3.7 Secondary menu).

If the problem has not been resolved or in the case of other types of fault, contact your local technical support centre.

If other ERRx error messages are indicated:

Note down the error message, function and set temperature and contact your local technical support centre.

5 Installation

5.1 Electrical connection

Power voltage
Danger of electrocution

- Have the electrical connection performed by authorised technical personnel.
- The appliance must be connected to earth in compliance with electrical system safety standards.
- Disconnect the mains power supply.

General information

Check the grid characteristics against the data indicated on the plate.

The identification plate bearing the technical data, serial number and brand name is visibly positioned on the appliance.

Do not remove this plate for any reason.

The appliance operates at 220-240 V~.

Use a three-core cable (3 x 1.5 mm^2 internal conductors).

Perform the ground connection using a wire that is 20 mm longer than the other wires.

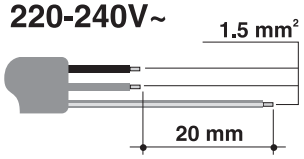

Fixed connection

Fit the power line with an omnipolar circuit breaker in compliance with installation regulations.

The omnipolar circuit breaker should be located near the appliance and in an easily reachable position, according to applicable electrical codes.

Connection with plug and socket

Make sure that the plug and socket are of the same type.

Avoid using adapters and shunts as these could cause overheating and a risk of burns.

Cable replacement

Power voltage
Danger of electrocution

- Disconnect the mains power supply.

1. Unscrew the rear casing screws and remove the casing to access the terminal board.
2. Replace the cable.
3. Make sure that the cables (for the oven or any hob) follow the best route in order to avoid any contact with the appliance.

5.2 Positioning

Heavy appliance
Crushing hazard

- Position the appliance into the cabinet cut-out with the help of a second person.

Pressure on the open door
Risk of damage to the appliance

- Never use the oven door to lever the appliance into place when fitting.
- Avoid exerting too much pressure on the oven door when open.

Heat production during appliance operation
Risk of fire

- Check that the carcase material is heat resistant.
- Check that the carcase has the required openings.
- Do not install the appliance in a recess which can be closed with a door, or in a cupboard.

Position of the power cable

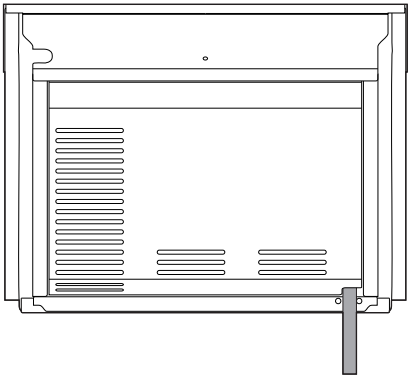

(rear view)

Front panel seal

Glue the supplied seal to the rear part of the front panel to avoid water or other liquids from leaking in.

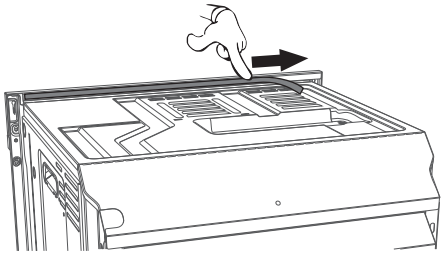

Fastening bushings

Remove the bushing covers on the front of the oven.

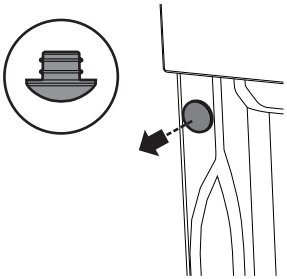

Mount the appliance into the recess.

Secure the appliance to the carcase using the screws.

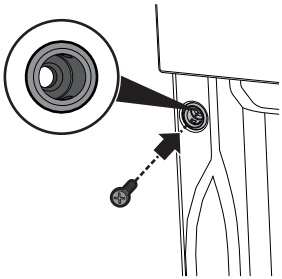

Cover the bushings with the previously removed covers.

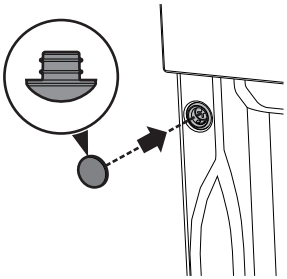

Appliance overall dimensions (mm)

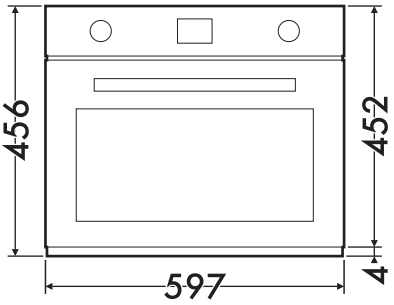

(front view)

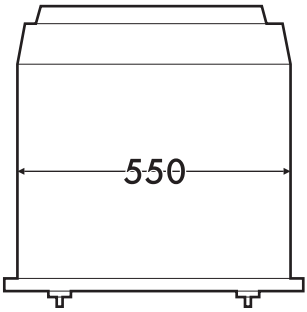

(top view)

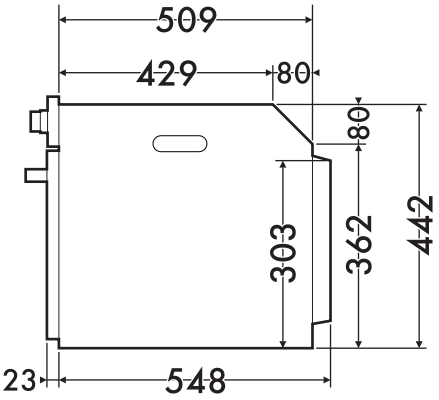

(side view)

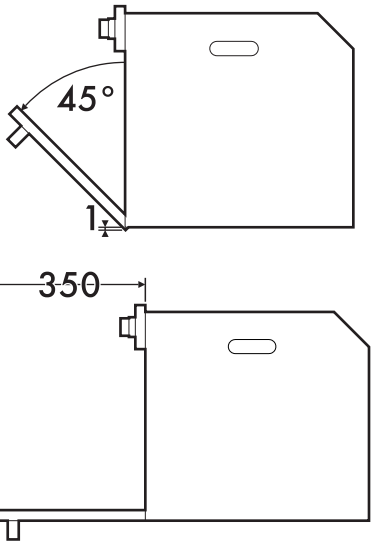

Mounting under worktops (mm)

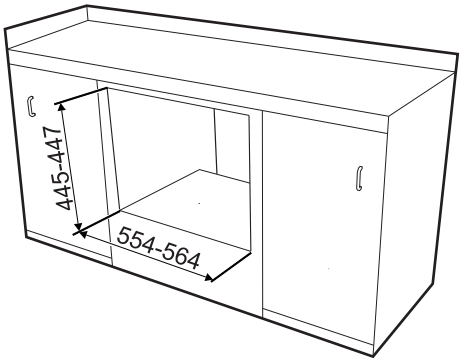

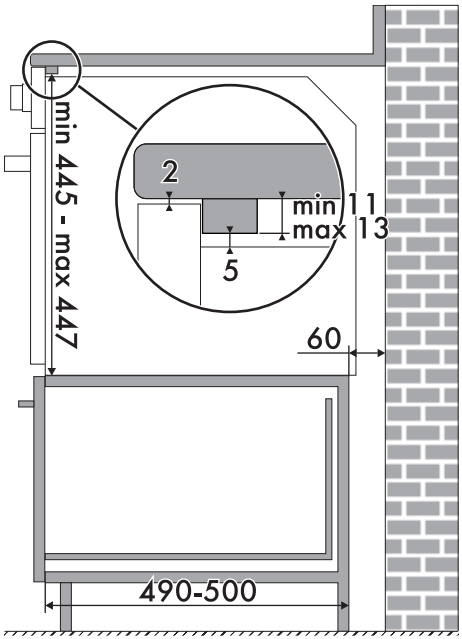

Make sure that the carcase rear/ bottom section has an opening of approx. 60 mm.

Mounting into a column (mm)

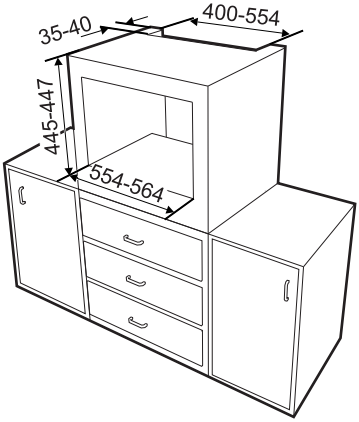
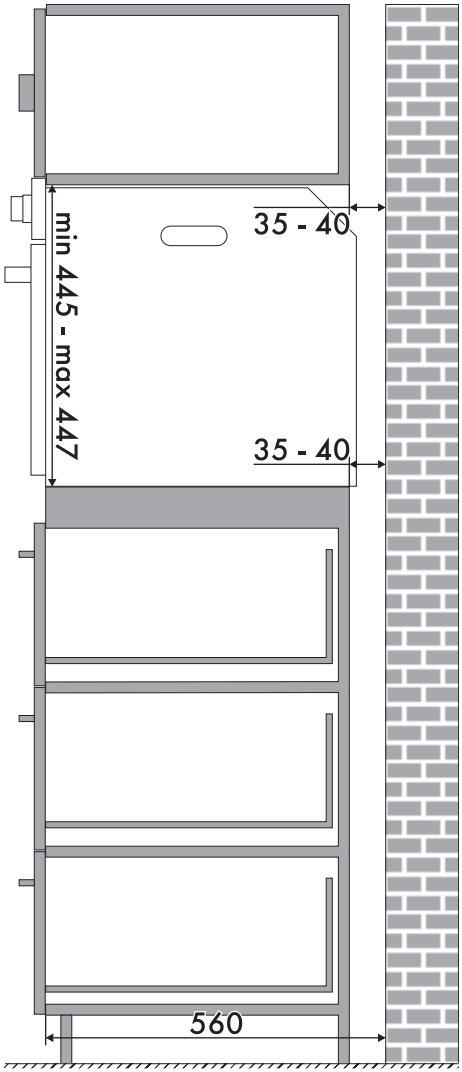
Make sure that the carcase top/ rear section has an opening approx. 35-40 mm deep.