BOSCH

Register your new device on MyBosch now and get free benefits: **bosch-home.com/welcome**

MyBosch

Washing machine

WAV28EH3GB

[en] User manual and installation instructions

Table of contents

1 Safety 4
1.1 General information 4
1.2 Intended use 4
1.3 Restriction on user group 4
1.4 Safe installation 5
1.5 Safe use 7
1.6 Safe cleaning and maintenance 9

2 Preventing material damage 10

3 Environmental protection and saving energy 11
3.1 Disposing of packaging 11
3.2 Save energy and conserve resources 11
3.3 Energy saving mode 12

4 Installation and connection 12
4.1 Unpacking the appliance 12
4.2 Contents of package 13
4.3 Requirements for the installation location 13
4.4 Removing the transit bolts 14
4.5 Connecting the appliance 15
4.6 Aligning the appliance 16
4.7 Connecting the appliance to the electricity supply 17

5 Familiarising yourself with your appliance 18
5.1 Appliance 18
5.2 Detergent drawer 19
5.3 Controls 19
5.4 Operating logic 19

6 Display 21

7 Buttons 25

8 Programmes 29

9 Accessories 42

10 Before using for the first time 42
10.1 Starting an empty washing cycle 42

11 Laundry 43
11.1 Preparing the laundry 43
11.2 Sorting laundry 43
11.3 Degrees of soiling 44
11.4 Care symbols on the care labels 44

12 Detergents and care products 44
12.1 Detergent recommendation 45
12.2 Detergent dosage 45

13 Basic operation 46
13.1 Switching on the appliance 46
13.2 Setting a programme 46
13.3 Adjusting the programme settings 47
13.4 Saving the programme settings 47
13.5 Loading laundry 47
13.6 Adding detergent and care product 48
13.7 Starting the programme 48
13.8 Adding laundry 48
13.9 Cancelling the programme 48
13.10 Resuming the programme when the programme status is Rinse Hold 49
13.11 Unloading the laundry 49
13.12 Switching off the appliance 49

14 Childproof lock 49
14.1 Activating the childproof lock 49
14.2 Deactivating the childproof lock 50

15 Intelligent dosing system 50
15.1 Filling the dispenser 50
15.2 Dispenser contents 50
15.3 Basic dosage 51

16 Home Connect 51
16.1 Connecting the appliance to a WLAN home network (Wi-Fi) with WPS function 51
16.2 Connecting the appliance to a WLAN home network (Wi-Fi) without WPS function 52
16.3 Connecting your appliance to the Home Connect app..... 53
16.4 Connecting the appliance to the energy manager..... 53
16.5 Activating Wi-Fi on the appliance 54
16.6 Deactivating Wi-Fi on the appliance 54
16.7 Software update 54
16.8 Resetting the appliance network settings 54
16.9 Remote diagnostics 55
16.10 Data protection..... 55

17 Basic settings..... 55
17.1 Overview of the basic settings..... 55
17.2 Changing the basic settings..... 56

18 Cleaning and servicing..... 56
18.1 Tips on appliance care..... 56
18.2 Cleaning the drum..... 57
18.3 Cleaning the detergent drawer..... 57
18.4 Descaling..... 59
18.5 Cleaning the drain pump..... 59
18.6 Cleaning the intake opening in the rubber gasket..... 61
18.7 Cleaning the water outlet hose at the siphon 62
18.8 Cleaning the water inlet filter 62

19 Troubleshooting..... 64

20 Transportation, storage and disposal 73
20.1 Removing the appliance 73
20.2 Inserting the transit bolts..... 73
20.3 Using the appliance again 74
20.4 Disposing of old appliance 74

21 Customer Service..... 75
21.1 Product number (E-Nr.) and production number (FD)..... 75
21.2 AQUA-STOP guarantee..... 75

22 Consumption values..... 76

23 Technical specifications..... 77

24 Declaration of Conformity 77

1 Safety

Observe the following safety instructions.

1.1 General information

- Read this instruction manual carefully.
- Keep the instruction manual and the product information safe for future reference or for the next owner.
- Do not connect the appliance if it has been damaged in transit.

1.2 Intended use

Only use this appliance:
- For washing machine-washable fabrics and hand-washable wool in accordance with the care label.
- With tap water and commercially available detergents and care products suitable for washing machines.
- In private households and in enclosed spaces in a domestic environment.
- Up to an altitude of max. 4000 m above sea level.

1.3 Restriction on user group

This appliance may be used by children aged 8 or over and by people who have reduced physical, sensory or mental abilities or inadequate experience and/or knowledge, provided that they are supervised or have been instructed on how to use the appliance safely and have understood the resulting dangers.
Children must not play with the appliance.
Cleaning and user maintenance must not be performed by children unless they are being supervised.
Keep children under the age of 3 years and pets away from the appliance.

1.4 Safe installation

Take note of the safety instructions when installing the appliance.

⚠ WARNING – Risk of electric shock!

Improper installation is dangerous.

- ▶ Connect and operate the appliance only in accordance with the specifications on the rating plate.
- ▶ Connect the appliance to a power supply with alternating current only via a properly installed socket with earthing.
- ▶ The protective conductor system of the domestic electrical installation must be properly installed. The installation must have a sufficiently large cross section.
- ▶ When using a residual current circuit breaker, only use a type with the ⊠ mark.
- ▶ Never equip the appliance with an external switching device, e.g. a timer or remote control.
- ▶ When the appliance is installed, the mains plug of the power cord must be freely accessible. If free access is not possible, an all-pole isolating switch must be installed in the permanent electrical installation according to the installation regulations.
- ▶ When installing the appliance, check that the power cable is not trapped or damaged.

If the insulation of the power cord is damaged, this is dangerous.

- ▶ Never let the power cord come into contact with hot appliance parts or heat sources.
- ▶ Never let the power cord come into contact with sharp points or edges.
- ▶ Never kink, crush or modify the power cord.

⚠ WARNING – Risk of fire!

It is dangerous to use an extended power cord and non-approved adapters.

- ▶ Do not use extension cables or multiple socket strips.
- ▶ If the power cord is too short, contact Customer Service.
- ▶ Only use adapters approved by the manufacturer.

⚠ WARNING – Risk of injury!

The high weight of the appliance may result in injury when lifted.

- ▶ Do not lift the appliance on your own.

If this appliance is not correctly installed in a washer-dryer stack, the installed appliance may fall.

- ▶ Only stack the dryer on a washing machine using the connection kit from the dryer manufacturer . No other installation method is permitted.
- ▶ Do not install the appliance in a washer-dryer stack if the dryer manufacturer does not offer a suitable connection kit.
- ▶ Do not install appliances from different manufacturers and with varying depths and widths in a washer-dryer stack.
- ▶ Do not install a washer-dryer stack on a platform; the appliances may tip over.

⚠ WARNING – Risk of suffocation!

Children may put packaging material over their heads or wrap themselves up in it and suffocate.

- ▶ Keep packaging material away from children.
- ▶ Do not let children play with packaging material.

⚠ CAUTION – Risk of injury!

The appliance may vibrate or move when in use.

- ▶ Place the appliance on a clean, even, solid surface.
- ▶ Align the appliance using the appliance feet and a spirit level.

If hoses and power cords have been laid incorrectly, this causes a tripping hazard.

- ▶ Lay hoses and power cords in such a way that there is no risk of tripping.

If the appliance is moved by holding onto protruding components, such as the appliance door, the parts may break off.

- ▶ Do not move the appliance by holding onto protruding parts.

⚠ CAUTION – Risk of cutting!

Touching sharp edges on the appliance may lead to cuts.

- ▶ Do not touch the sharp edges on the appliance.

- Wear protective gloves when installing and transporting the appliance.

1.5 Safe use

⚠ WARNING – Risk of electric shock!

If the appliance or the power cord is damaged, this is dangerous.

- Never operate a damaged appliance.
- Never pull on the power cord to unplug the appliance. Always unplug the appliance at the mains.
- If the appliance or the power cord is damaged, immediately unplug the power cord or switch off the fuse in the fuse box and turn off the water tap.
- Call customer services. → *Page 75*

An ingress of moisture can cause an electric shock.

- Only use the appliance in enclosed spaces.
- Never expose the appliance to intense heat or humidity.
- Do not use steam- or high-pressure cleaners, hoses or sprays to clean the appliance.

⚠ WARNING – Risk of harm to health!

Children can lock themselves in the appliance, thereby putting their lives at risk.

- Do not install the appliance behind a door as this may obstruct the appliance door or prevent it from opening.
- With redundant appliances, unplug the power cord. Then cut through the cord and damage the lock on the appliance door beyond repair so that the appliance door will no longer close.

⚠ WARNING – Risk of suffocation!

Children may breathe in or swallow small parts, causing them to suffocate.

- Keep small parts away from children.
- Do not let children play with small parts.

⚠ WARNING – Risk of poisoning!
Detergents and care products may result in poisoning if consumed.
- ▶ If accidentally swallowed, seek medical advice.
- ▶ Keep detergents and care products out of the reach of children.

⚠ WARNING – Risk of explosion!
Laundry that has been pretreated with cleaning agents that contain solvents may cause an explosion in the appliance.
- ▶ Rinse pretreated laundry thoroughly with water before washing.

⚠ CAUTION – Risk of injury!
The covering plate may break if you stand on or climb onto the appliance.
- ▶ Do not stand on or climb onto the appliance.

The appliance may tip over if you sit on or lean against the open door.
- ▶ Do not sit on or lean against the appliance door.
- ▶ Do not place any objects on the appliance door.

Reaching into the drum while it is still turning may cause hand injuries.
- ▶ Wait for the drum to come to a complete stop before reaching inside.

⚠ CAUTION – Risk of burns!
When washing at high temperatures, the glass in the appliance door becomes hot.
- ▶ Do not touch the appliance door when it is hot.
- ▶ Keep children away from the appliance door when it is hot.

⚠ CAUTION – Risk of scalding!
When you wash at high temperatures, the detergent solution gets hot.
- ▶ Do not touch the hot detergent solution.

⚠ CAUTION – Risk of chemical burns!
If the detergent drawer is opened, detergent and care products may spray out from the appliance. Contact with eyes or skin may cause irritation.
- ▶ Rinse eyes and/or skin thoroughly with clean water if they come into contact with detergents or care products.
- ▶ If accidentally swallowed, seek medical advice.
- ▶ Keep detergents and care products out of the reach of children.

1.6 Safe cleaning and maintenance

Take note of the safety instructions when cleaning and performing maintenance work on the appliance.

⚠ WARNING – Risk of electric shock!
Incorrect repairs are dangerous.
- ▶ Repairs to the appliance should only be carried out by trained specialist staff.
- ▶ Only use genuine spare parts when repairing the appliance.
- ▶ If the power cord of this appliance is damaged, it must be replaced by the manufacturer, the manufacturer's Customer Service or a similarly qualified person in order to prevent any risk.

An ingress of moisture can cause an electric shock.
- ▶ Do not use steam- or high-pressure cleaners, hoses or sprays to clean the appliance.

⚠ WARNING – Risk of injury!
The use of non-original spare parts and non-original accessories is dangerous.
- ▶ Only use the manufacturer's original spare parts and original accessories.

⚠ WARNING – Risk of poisoning!
Poisonous fumes may be given off if you use cleaning agents that contain solvents.
- ▶ Do not use cleaning agents that contain solvents.

2 Preventing material damage

Follow these instructions to avoid material damage and damage to the appliance.

ATTENTION!
The functionality of the appliance may be impaired if you use the wrong quantity of fabric softener, detergent, care product or cleaning agent.

- Follow the dosage recommendations from the manufacturer.

Exceeding the maximum load capacity impairs the function of the appliance.

- Observe the maximum load capacity for each programme and do not exceed it.
  → *"Programmes", Page 29*

The appliance is secured for transportation using transit bolts. Transit bolts which have not been removed may result in material damage and damage to the appliance.

- Before starting up the appliance, remove the transit bolts completely and keep them in a safe place.
- Before transport, fit the transit bolts fully in order to prevent damage in transit.

Material damage may be caused if the water inlet hose is connected incorrectly.

- Tighten the screw connections on the water inlet until they are hand-tight.
- Ideally, connect the water inlet hose directly to the water tap, without any additional connecting elements such as adapters, extensions, valves or similar.
- Make sure that the valve housing for the water inlet hose does not come into contact with its surroundings and is not subjected to any external forces.
- Ensure that the inner diameter of the water tap is at least 17 mm.
- Make sure that the length of the thread on the connection to the water tap is at least 10 mm.

If the water pressure is too high or too low, the appliance may not be able to operate properly.

- Ensure that the water pressure in the water supply system is at least 100 kPa (1 bar) and max. 1000 kPa (10 bar).
- If the water pressure exceeds the maximum value specified, a pressure-reducing valve must be installed between the drinking water connection and the hose set of the appliance.
- Do not connect the appliance to the mixer tap of an unpressurised hot-water boiler.

Modified or damaged water hoses may result in material damage and damage to the appliance.

- Never kink, crush, modify or cut through water hoses.
- Only use the water hoses supplied with the appliance or genuine spare hoses.
- Never re-use water hoses that have been used before.

Operating the appliance using water that is dirty or too hot may cause material damage.

- Only operate the appliance with cold mains water.

Unsuitable cleaning products may damage the surfaces of the appliance.

- Do not use harsh or abrasive detergents.
- Do not use cleaning products with a high alcohol content.

- Do not use hard scouring pads or cleaning sponges.
- Clean the appliance with nothing but water and a soft, damp cloth.
- Remove all detergent residue, spray residue or other residues immediately if they come into contact with the appliance.

3 Environmental protection and saving energy

3.1 Disposing of packaging

The packaging materials are environmentally compatible and can be recycled.

- Sort the individual components by type and dispose of them separately.

3.2 Save energy and conserve resources

If you follow these instructions, your appliance will use less electricity and less water.

Choose programmes with low temperatures and longer wash times and use maximum load capacity → *Page 29*.

✔ Energy consumption and water consumption is most efficient.

Use the economy programme settings.

✔ If you adjust the programme settings for a programme, the display shows the expected consumption.

Add → *Page 45* detergent based on the laundry's degree of soiling.

✔ For light to normal soiling, a smaller amount of detergent is sufficient. Observe the dosage recommendation from the detergent manufacturer.

Reduce the washing temperature for lightly and normally soiled laundry.

✔ At low temperatures, the appliance consumes less energy. For light to normal soiling, lower temperatures than indicated on the care label are also sufficient.

Set the maximum spin speed if you want to dry the laundry in a tumble dryer afterwards.

✔ The drier the laundry, the shorter the programme duration when drying which, in turn, reduces energy consumption. A higher spin speed reduces the residual moisture in the laundry and increases the volume of the spin noise.

Wash the laundry without prewash.

✔ Washing with prewash increases the programme duration and increases energy and water consumption.

The appliance has a continuous automatic load adjustment function.

✔ Depending on the type of fabric and load capacity, the continuous automatic load adjustment function optimally adjusts the water consumption and programme duration.

The appliance comes with an AquaSensor.

✔ During the rinse cycle, the AquaSensor checks the degree of turbidity of the rinsing water, and adjusts the duration and number of rinse cycles accordingly.

3.3 Energy saving mode

If you do not use the appliance for an extended period, it automatically switches to energy-saving mode. All displays go out and **Start/Reload** ▷II flashes.
Energy-saving mode ends when you use the appliance again, e.g. if you open or close the door.
If you do not use the appliance for an extended period, the appliance switches off automatically.

Note: If Wi-Fi is activated, the appliance will not switch itself off automatically.

4 Installation and connection

4.1 Unpacking the appliance

Note: Please read the information in the Safety → *Page 4* and Preventing material damage → *Page 10* sections to ensure that you use the appliance safely.

ATTENTION!
Objects remaining in the drum that are not designed for operation with the appliance may cause material damage and damage to the appliance.

▶ Remove these objects, along with all supplied accessories, from the drum before starting the appliance.

1. Remove any packaging and protective covers completely from the appliance.

   For the environmentally friendly disposal of the packaging materials, observe the information on the topic of
   → *"Disposing of packaging", Page 11*.
2. Check the appliance for visible damage.
3. Open the door.
   → *"Basic operation", Page 46*
4. Remove the accessory from the drum.
5. Close the door.

4.2 Contents of package

After unpacking all parts, check for any damage in transit and completeness of the delivery.

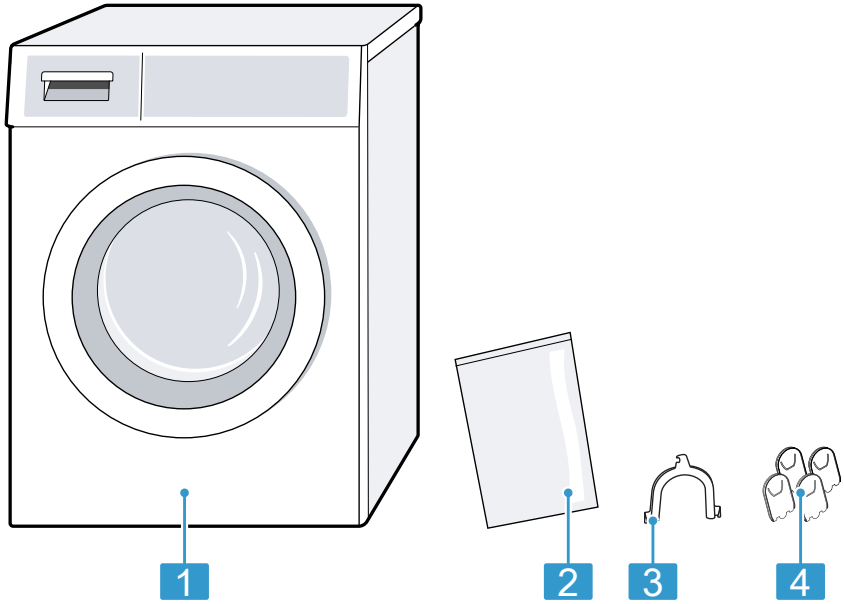

1	Washing machine
2	Accompanying documents
3	Elbow for fixing the water outlet hose
4	Cover caps

4.3 Requirements for the installation location

Note: Please read the information in the Safety → *Page 4* and Preventing material damage → *Page 10* sections to ensure that you use the appliance safely.

⚠ **WARNING**
Risk of electric shock!
The appliance contains live parts. Touching live parts is dangerous.
- Do not operate the appliance without a cover cap.

⚠ **WARNING**
Risk of injury!
When using the appliance on a base, the appliance may tip over.
- Always secure the feet of the appliance to a base using the manufacturer's fixing brackets → *Page 42* before using the appliance for the first time.

ATTENTION!
If the appliance is installed in areas exposed to frost or outdoors, frozen residual water may damage the appliance and frozen hoses may crack or split.
- Do not install or operate this appliance anywhere that is liable to experience frost and/or outdoors.

The appliance underwent a function test before leaving the factory and may, therefore, contain residual water. This residual water may leak out if the appliance is tilted at an angle greater than 40°.
- Tilt the appliance carefully.

Installation location	Requirements
On a base 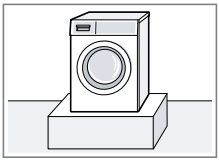	Secure the appliance with fixing brackets → *Page 42*.
On a wooden joist floor 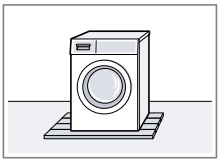	Place the appliance on a water-resistant wooden board which is screwed tightly to the floor. The wooden board should be at least 30 mm thick.
In a kitchen unit 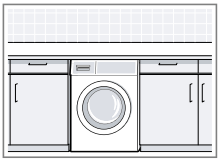	■ A niche width of 60 cm is required. ■ Only install the appliance underneath a continuous worktop that is securely connected to adjacent cabinets.
On a wall 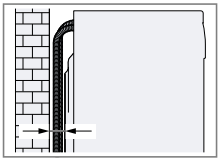	Do not trap the hoses between the wall and the appliance.

4.4 Removing the transit bolts

The appliance is secured for transportation using transit bolts on the rear of the appliance.

Notes
- Please read the information in the Safety → *Page 4* and Preventing material damage → *Page 10* sections to ensure that you use the appliance safely.
- Keep the transit bolts, screws and sleeves in a safe place for future transport → *Page 73*.

1. Pull the hoses out of the holders.

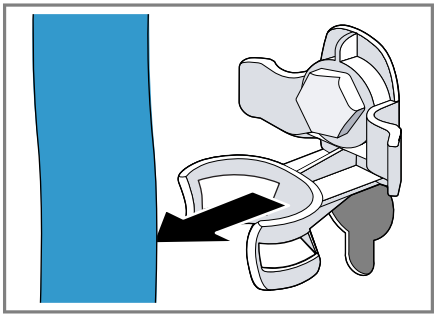

2. Unscrew ① and remove ② all four screws for the transit bolts with a WAF 13 wrench.

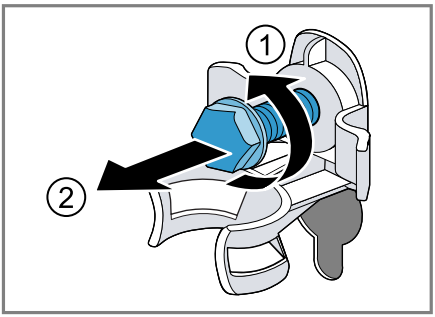

3. Pull the power cord out of the holder.

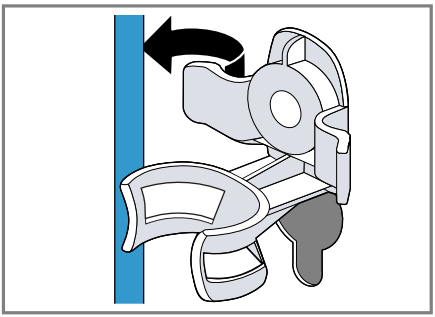

4. Remove the four sleeves.

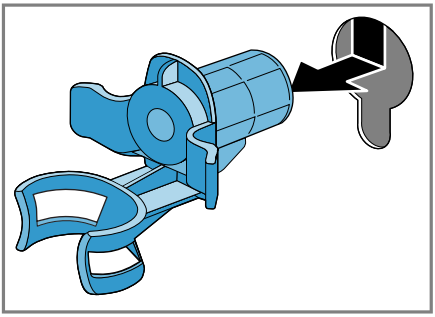

5. Put on the four cover caps.

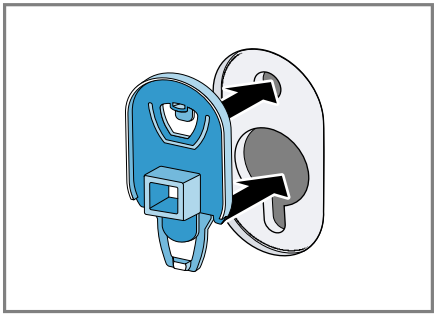

6. Press down on the four cover caps.

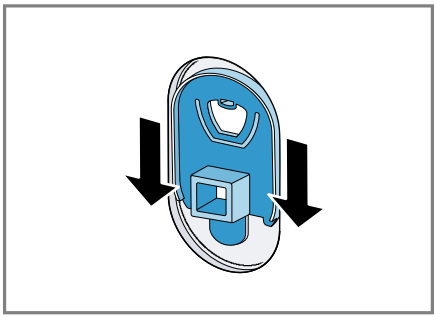

4.5 Connecting the appliance

Connecting the water inlet hose

Note: Please read the information in the Safety → *Page 4* and Preventing material damage → *Page 10* sections to ensure that you use the appliance safely.

⚠ **WARNING**
Risk of electric shock!
The appliance contains live parts. Touching live parts is dangerous.
- Do not immerse the electrical AquaStop valve in water.

1. Connect the water inlet hose to a tap (26.4 mm = 3/4").

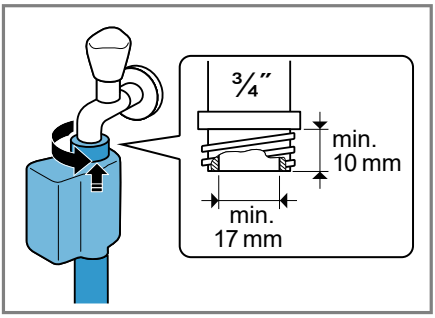

2. Open the water tap carefully and check that the connection points are tight.

Water outlet connection types

This information is intended to help you to connect this appliance to the water outlet.

Note: Please read the information in the Safety → *Page 4* and Preventing material damage → *Page 10* sections to ensure that you use the appliance safely.

ATTENTION!
When draining, the water outlet hose is subject to water pressure and may come loose from the installed connection point.
- Secure the water outlet hose against unintentional loosening.

Note: Observe the draining heights. The maximum draining height is 100 cm.

Drainage into a siphon 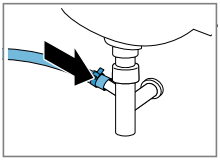	Secure the connection point with a (24–40 mm) hose clamp.
Drainage into a washbasin 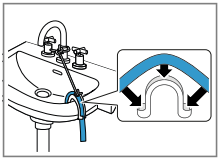	Fix and secure the water outlet using an elbow.
Drainage into a plastic pipe with rubber sleeve or into a gully. 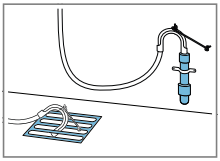	Fix and secure the water outlet using an elbow.

4.6 Aligning the appliance

In order to reduce noise and vibration and to prevent the appliance from moving, align the appliance correctly.

Note: Please read the information in the Safety → *Page 4* and Preventing material damage → *Page 10* sections to ensure that you use the appliance safely.

1. Loosen the lock nuts using a WAF 17 wrench by turning it in a clockwise direction.

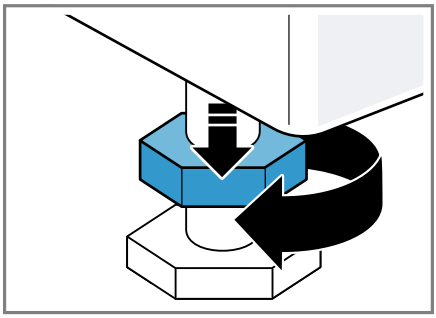

2. To align the appliance, turn the appliance feet. Check that the appliance is level using a spirit level.

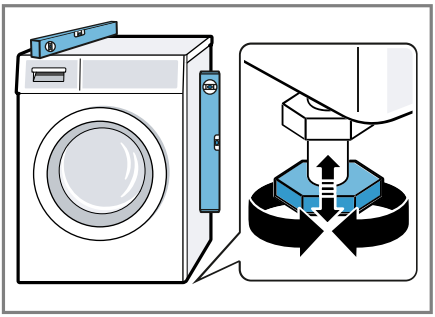

All appliance feet must stand firmly on the ground.

3. Screw the lock nuts tightly against the housing using a WAF 17 wrench.

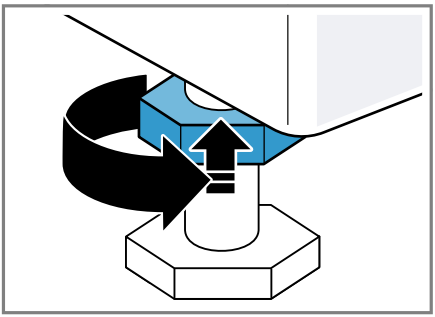

In doing so, hold the foot tight and do not adjust its height.

4.7 Connecting the appliance to the electricity supply

Note: Please read the information in the Safety → *Page 4* and Preventing material damage → *Page 10* sections to ensure that you use the appliance safely.

1. Insert the mains plug of the appliance's power cable in a socket nearby.

   The connection details of the appliance can be found under Technical data → *Page 77*.

2. Check the mains plug is inserted properly.

5 Familiarising yourself with your appliance

5.1 Appliance

You can find an overview of the parts of your appliance here.

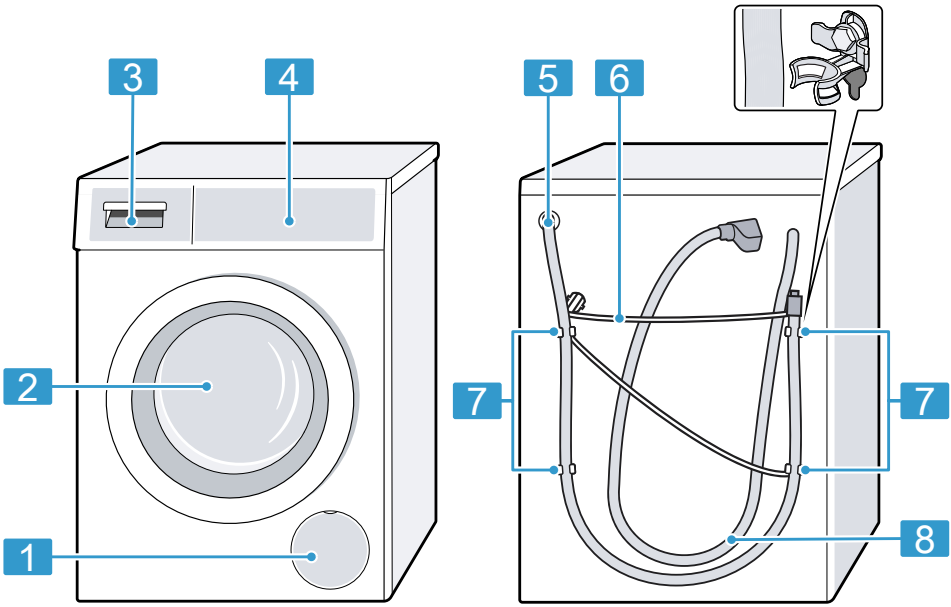

On certain models, specific details such as the colour and shape may differ from those pictured.

1	Maintenance flap for the drain pump → *Page 59*
2	Door
3	Detergent drawer → *Page 19*
4	Controls → *Page 19*
5	Water outlet hose → *Page 16*
6	Power cord → *Page 17*
7	Transit bolts → *Page 14*
8	Water inlet hose → *Page 15*

5.2 Detergent drawer

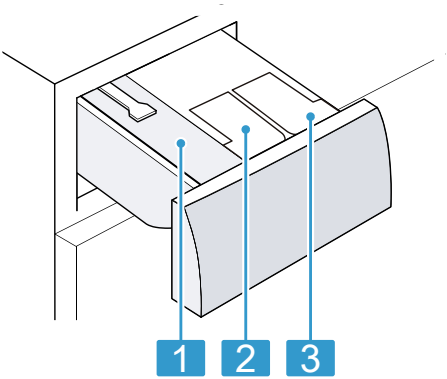

1	Manual dosing compartment
2	❀ / ♢ : Dispenser for fabric softener or detergent
3	♢ : Dispenser for detergent

5.3 Controls

You can use the control panel to configure all functions of your appliance and to obtain information about the operating status.

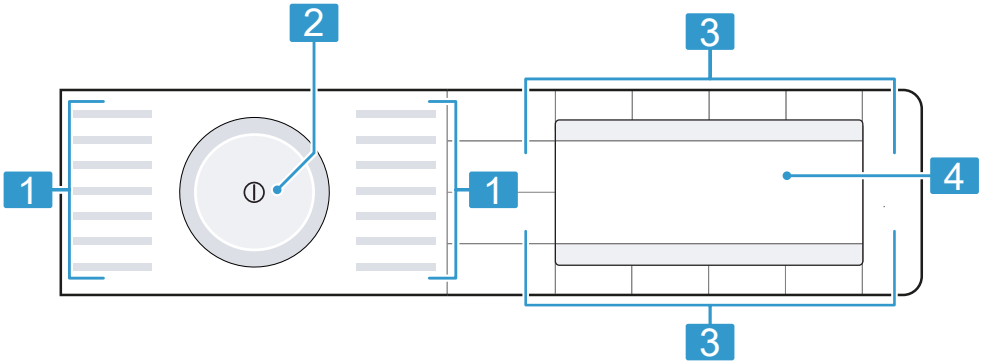

1	Programmes → *Page 29*
2	Programme selector → *Page 46*
3	Buttons → *Page 25*
4	Display → *Page 21*

5.4 Operating logic

Main menu
To select programme settings, press the buttons above or below the symbols.

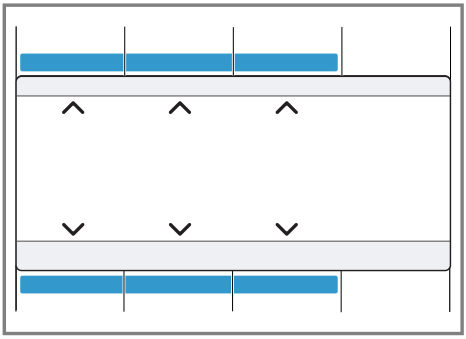

The selected programme setting is shown in the middle of the display.

Sub-menu
To select the settings you require, press the buttons below the symbols until the required setting is selected in the display.

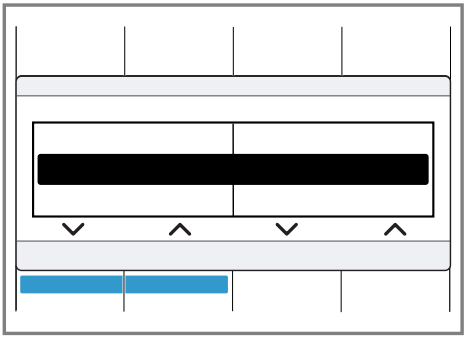

To select the settings you require, press the buttons below the symbols until the required setting is selected in the display.

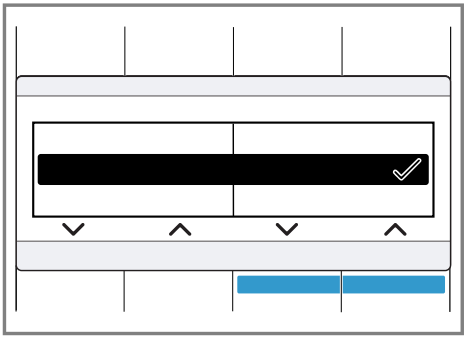

If a setting is activated, the display shows ✓. The selection does not need to be confirmed again.
The sub-menu closes automatically after a few seconds.

6 Display

The display shows the current settings, options or relevant information.

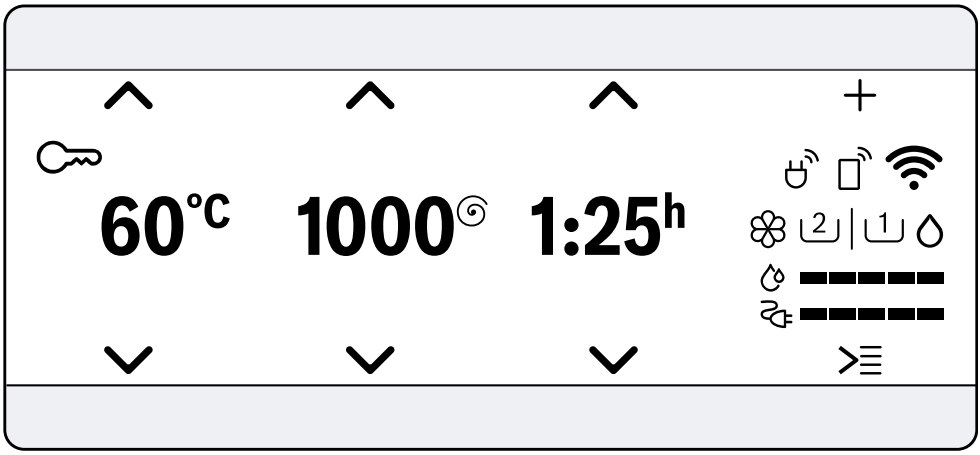

Example: Display

Display	Designation	Description
0:40 h [1]	Programme duration/programme time remaining	Approximate expected programme duration or programme time remaining.
10 h [1]	"Ready in" time	The programme end has been set and the remaining number of hours is displayed. → *"Buttons", Page 25*
9 kg [1]	Recommended load	The maximum load capacity for the selected programme in kg.
0 - 1400	Spin speed	Set spin speed in rpm. → *"Buttons", Page 26* 0 : No spin cycle, draining only
❄ – 90 °C	Temperature	Set temperature in °C. → *"Buttons", Page 26* ❄ (cold)
∨ ∧	Navigation	Selecting settings. → *"Operating logic", Page 19*
+	Other programme settings	Activate, deactivate or adjust other programme settings. → *"Buttons", Page 27*

[1] Example

Display	Designation	Description
	Saving the programme Other programmes	Save a programme → *Page 47*. Set other programmes → *Page 46*.
	Childproof lock	■ lights up: The childproof lock is activated. ■ flashes: The childproof lock is activated and the appliance has been operated. → *"Deactivating the childproof lock", Page 50*
	Easy Iron	The reduced creasing function is activated. → *"Buttons", Page 27*
+ +1 +2 +3	Extra Rinse	Additional rinse cycles are activated. → *"Buttons", Page 27*
	Prewash	Prewash is activated. → *"Buttons", Page 27*
	Water Plus	Wash with more water is activated. → *"Buttons", Page 27*
	Soaking	Soaking is activated. → *"Buttons", Page 27*
	Rinse Hold	Rinse Hold is activated. → *"Buttons", Page 27*
	Baby food	The stain type is activated.
	Blood	The stain type is activated.
	Egg	The stain type is activated.
	Strawberry	The stain type is activated.
	Soil and sand	The stain type is activated.
	Grass	The stain type is activated.
	Coffee	The stain type is activated.
	Cosmetics	The stain type is activated.
	Orange	The stain type is activated.
	Red Wine	The stain type is activated.
	Chocolate	The stain type is activated.
	Sweat	The stain type is activated.
	Dirty socks	The stain type is activated.
	Grease and oil	The stain type is activated.
	Tea	The stain type is activated.

[1] Example

Display	Designation	Description
	Tomato	The stain type is activated.
	Energy consumption	Energy consumption for the selected programme. ■ — : Low energy consumption ■ ——— : High energy consumption
	Water consumption	Water consumption for the selected programme. ■ — : Low water consumption ■ ——— : High water consumption
	Remote start	Remote start is activated. → *"Buttons", Page 26*
	Wi-Fi	■ Lights up: The appliance is connected to your home network. ■ Flashes: The appliance is trying to connect to your home network. → *"Home Connect ", Page 51*
	Wi-Fi	The appliance is not connected to your home network. → *"Home Connect ", Page 51*
	Energy manager	The appliance is connected to the smart energy system (energy manager). → *"Connecting the appliance to the energy manager", Page 53*
[1]	Dispenser for liquid detergent	■ Lights up: The intelligent dosing system for liquid detergent is activated. ■ Flashes: The fill level of the dispenser is below the minimum level. → *"Intelligent dosing system", Page 50* (liquid detergent)
[2]	Dispenser for liquid detergent or fabric softener.	■ Lights up: The intelligent dosing system for liquid detergent or fabric softener is activated. ■ Flashes: The fill level of the dispenser is below the minimum level. → *"Intelligent dosing system", Page 50* (liquid detergent) (fabric softener)

[1] Example

Display	Designation	Description
Dosage: 50% [1]	Dosing recommendation	The recommended dosage for detergent, if intelligent dosage has been deactivated. → *"Detergent dosage", Page 45* **Note:** The dosing recommendation indicates the load capacity that should be used for the relevant detergent dosage. The percentage refers to the maximum load capacity for the programme.
50 ml [1]	Basic dosage	Basic dosage for detergent or fabric softener. → *"Basic dosage", Page 51*

[1] Example

7 Buttons

With the **Options** button, you can open the sub-menu for additional programme settings. The additional programme settings are listed in the overview for the buttons.
The selection of programme settings depends on the programme that is set. You can see the selection options for each programme in the overview for
→ *"Programmes", Page 29*.

Button	Selection	Description
Start/Reload ▷II	■ Start ■ Cancel ■ Pause	Start, cancel or pause the programme.
SpeedPerfect	■ Activate ■ Deactivate	Activate or deactivate a short washing programme. **Note:** Energy consumption increases. The washing result is not affected by this.
Intensive Plus	■ Activate ■ Deactivate	Activate or deactivate an extended washing programme. The programme duration is extended by up to 30 minutes. Suitable for heavily soiled laundry.
Stains	Multiple selection	Select the type of stain. The temperature, drum movement and soaking time are all adjusted to suit the type of stain.
i-DOS	■ Activate ■ Deactivate ■ Dispenser contents ■ Basic dosage	Briefly press the button to activate or deactivate the intelligent dosing system for fabric softener or liquid detergent . Press the button for approx. 3 seconds to open the basic settings and specify the contents of the dispenser or set the basic dosage. → *"Overview of the basic settings", Page 55* → *"Intelligent dosing system", Page 50*
Finish in	1–24 hours	Set the programme end. The programme duration is already included in the set number of hours. Once the programme has started, the programme duration is displayed.

Button	Selection	Description
Temperature	❄ – 90 °C	Adjust the temperature in °C.
Spin Speed	0 – 1400 rpm	Adjust the spin speed or deactivate the spin cycle. If 0 is selected, the water is drained and the spin cycle is deactivated at the end of the washing cycle. The laundry stays wet inside the drum.
⏻ (mains switch)	■ Switch on ■ Switch off	Switch the appliance on or off.
Remote Start	■ Activate ■ Deactivate ■ Open the Home Connect menu	If you briefly press the button, the appliance will be enabled for remote start via the Home Connect app If you press the button for approx. 3 seconds, the Home Connect menu opens. **Notes** ■ Remote start cannot be activated for safety reasons in the following circumstances: – The door is open. – The detergent drawer has not been pushed in fully. ■ Remote start is deactivated for safety reasons in the following circumstances: – Open the door. – Press Start/Reload ▷II. – Press Remote Start . – Switch off the appliance. – Following a power cut.
Child Lock push 3 sec.	■ Activate ■ Deactivate	Activate or deactivate the childproof lock. Disable the control panel to prevent unwanted or accidental operation. If the childproof lock is activated and the appliance has been switched off, the childproof lock remains activated. → *"Childproof lock", Page 49*
🔧 3 sec. (Basic Settings 3 sec.)	Basic settings → *Page 55*	Change the basic settings for the appliance. → *"Changing the basic settings", Page 56*

Button	Selection	Description
Options	Multiple selection	Activate additional programme settings. → *"Adjusting additional programme settings", Page 47* The additional programme settings can be found in this overview.
Pre-wash	■ Activate ■ Deactivate	Activate or deactivate prewash, e.g. for washing heavily soiled laundry. **Note:** If the intelligent dosing system is activated, the detergent will be dispensed automatically for the prewash and the main wash. If the intelligent dosing system is deactivated, place the detergent for the prewash directly in the drum.
Rinse Plus	■ Activate ■ Deactivate	Activate or deactivate up to three additional rinse cycles. Recommended for particularly sensitive skin or in regions with very soft water.
Rinse Hold	■ Activate ■ Deactivate	Activate or deactivate spinning and draining at the end of the washing cycle. The laundry remains in the water after the last rinse cycle. → *"Resuming the programme when the programme status is Rinse Hold", Page 49*
Water Plus	■ Activate ■ Deactivate	Wash with more water. Recommended for particularly sensitive skin and for treating laundry more gently.
Soak	■ Activate ■ Deactivate	Activate or deactivate soaking. Before the main wash cycle starts, the laundry remains in the water for longer. For laundry with particularly stubborn soiling.
Less Ironing	■ Activate ■ Deactivate	Activate or deactivate the reduced creasing programme. In order to reduce creasing in the laundry, the spin cycle and the spin speed are adapted.

Button	Selection	Description
		The laundry is damp enough after washing that it needs to be hung out on a washing line.

8 Programmes

Below is an overview of the programmes. You can find information on the load and on the adjustable programme options.

Tip: The laundry's care labels provide you with additional information on programme selection.
→ *"Care symbols on the care labels", Page 44*

Programme	Description	Max. load (kg)	Programme settings											
			Max. temperature (°C)	Max. spin speed (rpm)[1]	SpeedPerfect	Stains	Rinse Plus	Rinse Hold	Pre-wash	Soak	Water Plus	Less Ironing	i-DOS	i-DOS	Intensive Plus
Cottons	Wash hard-wearing items made from cotton, linen or blended fabrics. Also suitable as a short programme for normally soiled laundry when you activate SpeedPerfect. If SpeedPerfect is activated, the maximum load capacity is reduced to 5 kg.	9	90	1400	●	●	●	●	●	●	●	●	●	●	●

[1] Programme setting

Programme	Description		
		Max. load (kg)	9
		Programme settings: Intensive Plus	–
		Programme settings: i-DOS	●
		Programme settings: i-DOS	●
		Programme settings: Less Ironing	–
		Programme settings: Water Plus	–
		Programme settings: Soak	–
		Programme settings: Pre-wash	–
		Programme settings: Rinse Hold	–
		Programme settings: Rinse Plus	–
		Programme settings: Stains	–
		Programme settings: SpeedPerfect	–
		Programme settings: Max. spin speed (rpm) [1]	1400
		Programme settings: Max. temperature (°C)	–
Eco 40-60	Wash items made from cotton, linen or blended fabrics. **Note:** Textiles which can be washed from 40 °C up to 60 °C as per the care symbol can be washed together. The washing performance corresponds to the best possible washing performance class according to the legal requirements. For this programme, the washing temperature is automatically adjusted depending on the load size, in order to achieve the best possible energy		

[1] Programme setting

Programme	Description	Max. load (kg)	Programme settings												
			Intensive Plus	i-DOS	i-DOS	Less Ironing	Water Plus	Soak	Pre-wash	Rinse Hold	Rinse Plus	Stains	SpeedPerfect	Max. spin speed (rpm) [1]	Max. temperature (°C)
	efficiency with the best possible washing result. You cannot change the washing temperature.			●	●	●	●	●	●	●	●	●	●	1200	60
Easy Care	Wash items made from synthetic or blended fabrics.	4		●	●	●	●	●	●	●	●	●	●	1400	60
Mixed Load	Wash items made from cotton, linen, or synthetic or blended fabrics. Suitable for lightly soiled laundry.	4		–	●	●	●	●	●	●	●	●	–	800	40
Delicates/ Silk	Wash delicate, washable items made from silk, viscose and synthetics. Use a detergent that is suitable for delicates or silk.	2													

[1] Programme setting

Programme	Description		
Programme settings	Intensive Plus		–
	i-DOS		●
	i-DOS		–
	Less Ironing		–
	Water Plus		–
	Soak		–
	Pre-wash		–
	Rinse Hold		●
	Rinse Plus		–
	Stains		–
	SpeedPerfect		–
	Max. spin speed (rpm) [1]		800
	Max. temperature (°C)		40
Max. load (kg)			2
Wool	Hand- or machine-wash-able items that are made from wool or contain wool. To prevent the laundry from shrinking, the drum moves the items very gently with long pauses. Use a detergent that is suitable for wool.	**Note:** Wash especially delicate items or items with hooks, eyelets or clips in a mesh laundry bag.	

[1] Programme setting

Programme	Description	Max. load (kg)	Programme settings												
			Max. temperature (°C)	Max. spin speed (rpm)[1]	SpeedPerfect	Stains	Rinse Plus	Rinse Hold	Pre-wash	Soak	Water Plus	Less Ironing	i-DOS	i-DOS	Intensive Plus
Additional Programs	Set additional programmes. The additional programmes can be found in this programme overview. The selectable programme settings depend on the selected programme.	–	–	–	–	–	–	–	–	–	–	–	–	–	–
Drain	Drains the water, e.g. when a programme is cancelled. Do not use fabric softener.	–	–	1400	–	–	–	–	–	–	–	–	–	–	–
Rinse/ Freshen Up	Rinses and then spins the laundry, and then drains the water.	–	–	1400	–	–	●	●	–	–	●	●	–	–	–

[1] Programme setting

Programme	Description	Max. load (kg)	Programme settings											
			Max. temperature (°C)	Max. spin speed (rpm) [1]	SpeedPerfect	Stains	Rinse Plus	Rinse Hold	Pre-wash	Soak	Water Plus	Less Ironing	i-DOS	i-DOS	Intensive Plus
Spin	Spins and drains the water. Do not use fabric softener.	–	–	1400	–	–	–	–	–	–	–	●	–	–	–
Auto	Wash hard-wearing items made from cotton, synthetic or blended fabrics. The degree of soiling and the type of fabric are automatically detected. The washing process is adapted.	6	–	–	–	●	–	●	–	–	–	–	●	●	–
Auto Soft	Wash delicate items made from cotton, synthetic or blended fabrics. Gentle laundry care.	3,5	–	–	–	●	–	●	–	–	–	–	●	●	–

[1] Programme setting

| Programme | Description | | |

Programme	Description		
Programme settings	Intensive Plus		–
	i-DOS		–
	i-DOS		–
	Less Ironing		–
	Water Plus		–
	Soak		–
	Pre-wash		–
	Rinse Hold		–
	Rinse Plus		–
	Stains		–
	SpeedPerfect		–
	Max. spin speed (rpm) [1]		1200
	Max. temperature (°C)		–
Max. load (kg)			–
Drum clean	Cleaning and caring for the drum. Use this programme in the following cases: ■ Before using the appliance for the first time ■ If you regularly wash at temperatures of 40 °C or lower	Use a detergent that is suitable for down or delicates. Use sparingly. Do not use fabric softener. **Note:** To prevent excessive foaming, remove air from laundry items by rolling them up before you wash them.	

[1] Programme setting

Programme	Description	Max. load (kg)	Programme settings									
			Max. temperature (°C)	Max. spin speed (rpm)[1]	SpeedPerfect	Stains	Rinse Plus	Rinse Hold	Pre-wash	Soak	Water Plus	Less Ironing	i-DOS	i-DOS	Intensive Plus
	■ After a prolonged period of non-use Use washing powder or a detergent containing bleach. Halve the amount of detergent to avoid foaming. Do not use fabric softener. Do not use liquid detergent or detergent that is intended for woollens or delicates. **Note:** The drum cleaning indicator will flash to remind you if you have not used a programme at 60 °C or higher for a long time.														

[1] Programme setting

Programme	Description																		
		Programme settings																	
			Intensive Plus	i-DOS	i-DOS	Less Ironing	Water Plus	Soak	Pre-wash	Rinse Hold	Rinse Plus	Stains	SpeedPerfect	Max. spin speed (rpm) [1]	Max. temperature (°C)				
Max. load (kg)																			
Memory	Save the programme you require and the customised programme settings. The selectable programme settings depend on the selected programme.	–	–	–	–	–	–	–	–	–	–	–	–	–	–				
AllergyPlus	Wash hard-wearing items made from cotton, linen or blended fabrics. Suitable for allergy sufferers and for strict hygiene requirements. **Note:** Once the set temperature has been reached, it remains constant throughout the washing process.	6,5	●	●	●	●	●	●	●	●	●	●	●	1400	60				

[1] Programme setting

Programme	Description		
		Max. load (kg)	2
	Shirts	Wash non-iron shirts and blouses made from cotton, linen, synthetic or blended fabrics. **Tip:** In order to avoid creasing in your laundry, you can activate Less Ironing. The laundry is only given a short spin and can be removed while still dripping wet. Hang out shirts and blouses while they are still dripping wet so that they drip dry. **Note:** Use the Delicates/Silkprogramme to wash shirts and blouses made from silk or delicate fabrics.	**Max. temperature (°C)**	60
		Max. spin speed (rpm) [1]	800
		SpeedPerfect	–
		Stains	●
		Rinse Plus	●
		Rinse Hold	●
		Pre-wash	●
		Soak	●
		Water Plus	●
		Less Ironing	●
		i-DOS	●
		i-DOS	●
		Intensive Plus	●

[1] Programme setting

Programme	Description	Max. load (kg)	Programme settings												
			Max. temperature (°C)	Max. spin speed (rpm) [1]	SpeedPerfect	Stains	Rinse Plus	Rinse Hold	Pre-wash	Soak	Water Plus	Less Ironing	i-DOS	i-DOS	Intensive Plus
Sportswear	Wash sports and leisure items made from synthetic fibres, microfibre or fleece. Use a detergent that is suitable for sports items. Do not use fabric softener. **Tip:** Use the Easy Care-programme to wash heavily soiled laundry.	2	40	800	–	●	●	●	●	●	●	●	–	●	–
Super Quick 15'/30'	Wash items made from cotton, synthetic or blended fabrics. Short programme for small items of lightly soiled laundry. The programme duration is approx. 30 minutes.	4	40	1200	●	–	●	●	–	–	–	–	●	●	–

[1] Programme setting

Programme	Description	
	Programme settings	
	Intensive Plus	
	i-DOS	
	i-DOS	
	Less Ironing	
	Water Plus	
	Soak	
	Pre-wash	
	Rinse Hold	
	Rinse Plus	
	Stains	
	SpeedPerfect	
	Max. spin speed (rpm) [1]	
	Max. temperature (°C)	
Max. load (kg)		
		If you wish to reduce the programme duration to 15 minutes, activate SpeedPerfect. The maximum load is reduced to 2 kg.

[1] Programme setting

9 Accessories

Use original accessories. These have been made especially for your appliance.

	Use	Order number
Water inlet hose extension	Extend the water inlet hose for cold water or AquaStop (approx. 2.50 m).	WMZ2381
Fixing brackets	Improves the stability of the appliance.	WMZ2200

10 Before using for the first time

Prepare the appliance for use.

10.1 Starting an empty washing cycle

Your appliance was inspected thoroughly before leaving the factory. To remove any residual water, run the first wash cycle without any laundry.

Note: Please read the information in the Safety → *Page 4* and Preventing material damage → *Page 10* sections to ensure that you use the appliance safely.

1. Press ⏻ .

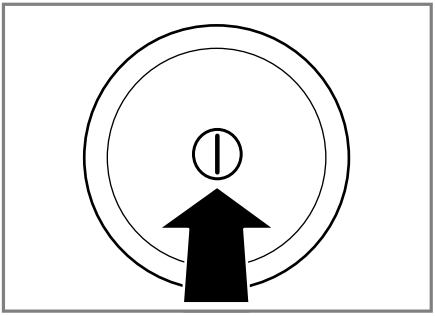

It may take a few seconds for the appliance to switch on.

2. Set the **Drum clean** programme.
3. Close the door.
4. Pull out the detergent drawer.

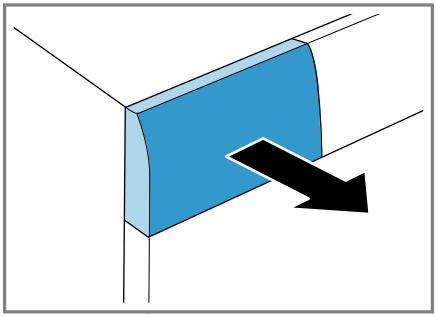

5. Add washing powder to the manual dosing compartment.

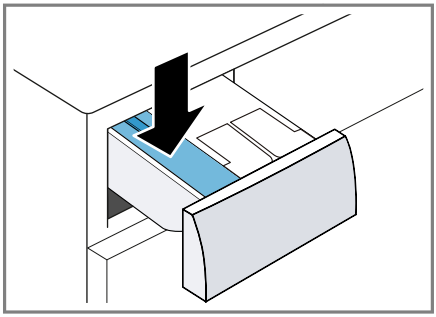

To prevent foaming, use only half of the amount of detergent recommended by the detergent manufacturer for light soiling. Do not use detergent suitable for woollens or delicates.

6. Push in the detergent drawer.

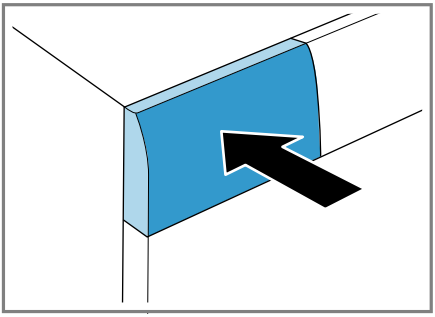

7. Press **Start/Reload** ▷II to start the programme.
✔ The display shows the remaining programme duration.
8. Start the first wash cycle or press ⏻ to switch off the appliance.
→ *"Basic operation", Page 46*

11 Laundry

11.1 Preparing the laundry

Note: Please read the information in the Safety → *Page 4* and Preventing material damage → *Page 10* sections to ensure that you use the appliance safely.

ATTENTION!
Objects remaining in the laundry may damage the laundry and the drum.

- Remove all items from any pockets in your laundry before using the appliance.

- To protect your appliance and the laundry, prepare the laundry beforehand.
  - Empty any pockets
  - Brush sand out of all collars and pockets
  - Close bed covers and cushion covers
  - Close all zips, Velcro fasteners, hooks and eyes
  - Tie cloth belts, apron strings, etc. together or use a laundry bag.
  - Remove curtain hooks and lead strips or use a mesh laundry bag
  - Use a mesh laundry bag for small items of laundry, such as children's socks
  - Some stubborn or dried-in stains can be removed by washing several times
  - Wash large and small items of laundry together
  - Do not rub fresh stains but dab them with soapy water
  - Separate items of laundry and shake them out

11.2 Sorting laundry

Note: Please read the information in the Safety → *Page 4* and Preventing material damage → *Page 10* sections to ensure that you use the appliance safely.

- To improve washing results and prevent discolouration, sort the laundry according to the following criteria before washing.
  - Type of fabric and fibre
    Wash laundry of the same type of fabric and fibre together.
  - Care symbols on the care labels → *Page 44*
  - Description of the programmes → *Page 29*
  - Whites
  - Colours
    Wash new coloured items separately the first time you wash them.

11.3 Degrees of soiling

Degree of soiling	Soiling	Examples
Light	■ No dirt or stains are visible ■ Laundry has absorbed odours	Light summer clothing or sports clothing that has been worn for a just a few hours
Normal	Dirt or light stains are visible	■ T-shirts, shirts or blouses are sweat-soaked or have been worn a few times ■ Towels or bedding that has been used for up to one week
Heavy	Dirt or stains are clearly visible	Tea towels, baby items or work clothing

11.4 Care symbols on the care labels

Washing care symbols

Symbol	Washing process	Recommended programme
95 60 40 30	Normal	Cotton
60 40 30	Gentle	Easy-Care
40 30	Particularly gentle	Delicates/Silk for washing by hand
	Hand wash	Wool
	Not suitable for machine-washing	–

12 Detergents and care products

Note: Please read the information in the Safety → *Page 4* and Preventing material damage → *Page 10* sections to ensure that you use the appliance safely.

The manufacturer's instructions for use and dosage can be found on the packaging.

Notes

- Only use liquid detergents that are self-flowing
- Do not mix different liquid detergents
- Do not mix detergent and fabric softener
- Do not use products that have expired or are highly congealed
- Do not use products containing solvents, caustic agents or volatile substances (e.g. bleach)
- Use dyes sparingly as salt may damage stainless steel

- Do not use bleaching agents in the appliance
- Do not use laundry vinegar

12.1 Detergent recommendation

Detergent	Fabrics	Programme	Temperature
Standard detergent with optical brighteners	Heat-resistant white fabrics made from cotton or linen	Cotton	From cold up to 90 °C
Detergent for colours without bleach or optical brighteners	Coloured fabrics made from linen or cotton	Cotton	From cold up to 60 °C
Detergent for colours/delicates without optical brighteners	Coloured fabrics made from easy-care fabrics or synthetic materials	Easy-Care	From cold up to 60 °C
Detergent for delicates	Delicate fine textiles, silk or viscose	Delicates/ Silk	From cold up to 40 °C
Detergent for woollens	Wool	Wool	From cold up to 40 °C

Tip: Visit www.cleanright.eu to find further information on detergents, care products and cleaning agents for domestic use.

12.2 Detergent dosage

The detergent dosage depends on:
- The amount of laundry
- Degree of soiling
- Water hardness

You can find out how hard your water is from your local water company or measure it yourself using a water hardness tester.

Water hardness

Hardness range	Total hardness in mmol/l	German degrees in °dH
soft (I)	0–1.5	0–8.4
medium (II)	1.5– 2.5	8.4–14
hard (III)	over 2.5	over 14

Example of a manufacturer's instructions for detergent
These example values refer to a standard load of 4–5 kg.

Soiling	Light	Normal	Heavy
Water hardness: Soft/medium	40 ml	55 ml	80 ml
Water hardness: Hard/very hard	55 ml	80 ml	105 ml

The dosages can be found on the manufacturer's packaging.

- If you are not using manual dosage, adjust the dosage to the actual load.
- If intelligent dosing is activated, do not adjust the dosage to the actual load capacity. The quantity of detergent and fabric softener is automatically calculated via the basic dosage → *Page 51* and the amount of laundry detected. The basic dosage setting must always comply with the dosage for a load of 4.5 kg.

13 Basic operation

13.1 Switching on the appliance

▸ Press ⏻ .

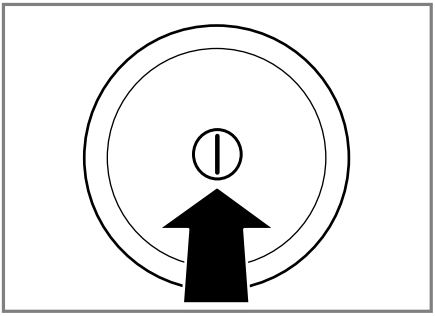

It may take a few seconds for the appliance to switch on.

✔ The appliance performs an audible function test in the detergent drawer.

Note: The drum is lit up after the door is opened and closed and once the programme has started. The light goes out automatically.

13.2 Setting a programme

1. Set the programme selector to the required programme.
   → *"Programmes", Page 29*

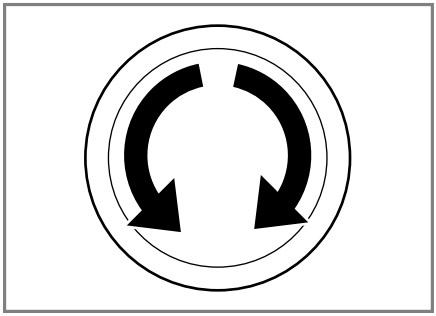

2. If necessary, adjust the programme settings → *Page 47*.

Setting additional programmes

1. Set the **Additional Programs** programme.
2. Press ≥≡ to call up the sub-menu for additional programmes.

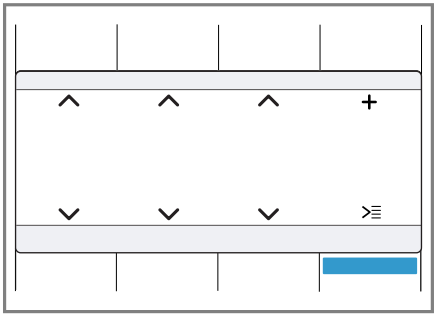

3. Select a programme.

4. Press **Main menu** to call up the main menu.
5. Adjust the programme settings if required.
6. Start the programme.

13.3 Adjusting the programme settings

Requirement: A programme has been set.
→ *"Setting a programme", Page 46*

- Adjust the programme settings.
  → *"Programmes", Page 29*

  Please follow the information about operating logic → *Page 19*.

Notes
- The programme settings are not saved permanently for the programme.
- The setting is saved if you activate or deactivate the intelligent dosing system.

Adjusting additional programme settings

1. Press **Options** to call up the sub-menu for the additional programme settings.
2. Select the programme settings.

   The programme settings are not saved permanently for the programme.
3. Press **Options** to call up the main menu.

13.4 Saving the programme settings

1. Set the **Memory** programme.
2. Press >≡ to call up the sub-menu for the memory programmes.

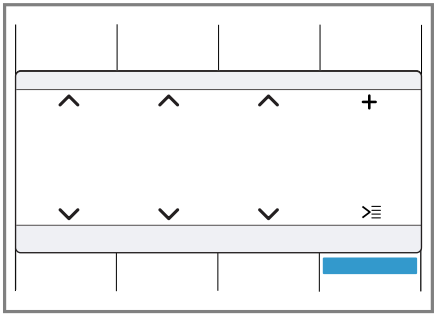

3. Select a programme.
4. Press **Main menu** to call up the main menu.
5. Adjust the programme settings if required.

✔ The programme is saved.

13.5 Loading laundry

Notes
- Please read the information in the Safety → *Page 4* and Preventing material damage → *Page 10* sections to ensure that you use the appliance safely.
- To prevent creasing, take note of the maximum load for the → *"Programmes", Page 29*.

Requirement: The laundry is prepared and sorted.
→ *"Laundry", Page 43*

1. Open the door.

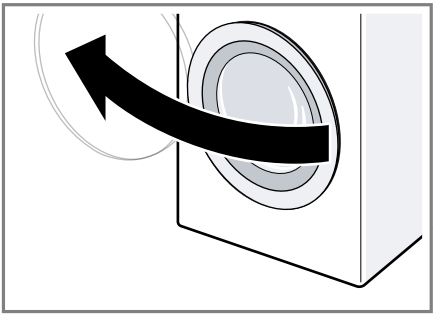

Make sure that the drum is empty.
2. Load the laundry unfolded into the drum.
3. Close the door.

   Ensure that there is no laundry trapped in the door.

13.6 Adding detergent and care product

For programmes in which intelligent dosing is not possible or desirable, you can add detergent to the manual dosing compartment.

Notes

- Please read the information in the Safety → *Page 4* and Preventing material damage → *Page 10* sections to ensure that you use the appliance safely.
- The dosing recommendation is aimed at the maximum load for the programme.

Tip: In addition to intelligent dosing, you can also add additional care product for laundry, e.g. stain remover, starch or bleach, to the manual dosing compartment. Do not add any additional detergent to the manual dosing compartment to avoid overdosage and/or foaming.

Requirement: Find out the optimum dosage for detergent and care product. → *Page 44*

1. Pull out the detergent drawer.
2. Pour in detergent.
   → *"Detergent drawer", Page 19*
3. If required, add the care product.
4. Push in the detergent drawer.

13.7 Starting the programme

Note: If you want to change the time until the programme ends, set the "Ready in" time first.

- ▸ Press **Start/Reload** ▷II.
- ✔ The drum rotates and load detection takes place. This can take up to 2 minutes, after which water enters the drum.
- ✔ The display shows either the programme duration or the "Ready in" time.

13.8 Adding laundry

Note: Please read the information in the Safety → *Page 4* and Preventing material damage → *Page 10* sections to ensure that you use the appliance safely.

1. Press **Start/Reload** ▷II.

   The appliance is paused and checks whether it is possible to add or remove laundry.
2. Add or remove laundry.
3. Close the door.
4. Press **Start/Reload** ▷II.

13.9 Cancelling the programme

Once the programme has started, you can cancel it at any time.

Note: Please read the information in the Safety → *Page 4* and Preventing material damage → *Page 10* sections to ensure that you use the appliance safely.

1. Press **Start/Reload** ▷II.

2. Open the door.

   The appliance door remains locked for safety reasons if the temperature and water levels are high.
   - If the temperature is high, start the **Rinse/Freshen Up** programme.
   - If the water level is high: Start the **Spin** or **Drain** programme.
3. Remove the laundry.

13.10 Resuming the programme when the programme status is Rinse Hold

1. Set the **Spin** or **Drain** programme.
2. Press **Start/Reload** ▷II.

13.11 Unloading the laundry

Note: Please read the information in the Safety → *Page 4* and Preventing material damage → *Page 10* sections to ensure that you use the appliance safely.

1. Open the door.
2. Remove the laundry.

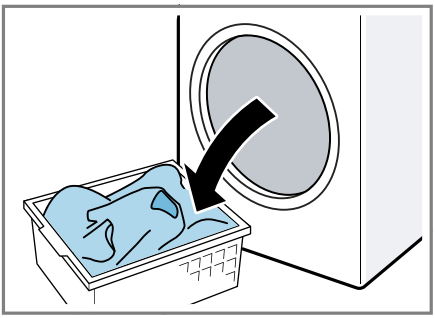

13.12 Switching off the appliance

1. Press ⏻ .

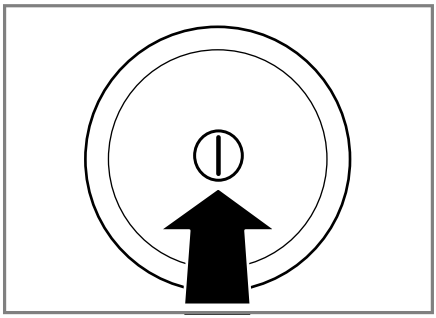

2. Wipe the rubber gasket dry and remove any foreign objects.

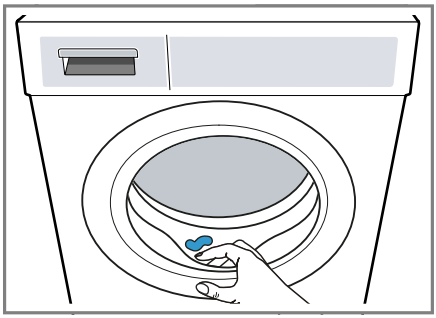

3. Leave the door and detergent drawer open so that residual water can evaporate.

14 Childproof lock

Secure your appliance against being operated unintentionally using the controls.

14.1 Activating the childproof lock

- ▸ Press and hold the two **Child Lock push 3 sec.** buttons for approx. 3 seconds.
- ✔ The display shows ⊶ .

✔ The controls are locked.
✔ The childproof lock remains active even after the appliance has been switched off.

14.2 Deactivating the childproof lock

Requirement: To deactivate the childproof lock, the appliance must be switched on.

▸ Press and hold the two **Child Lock push 3 sec.** buttons for approx. 3 seconds.

So that the programme currently running is not cancelled, the programme selector must be set to the initial programme.

✔ ⊶ goes out in the display.

15 Intelligent dosing system

The optimum quantities of liquid detergent and fabric softener are dispensed automatically depending on the programme and settings.

15.1 Filling the dispenser

Note
In order to use intelligent dosing, fill the dispenser.

- Fill the dispenser only with suitable detergent and care products → *Page 44*.
- If you change the liquid detergent or fabric softener, empty and clean the dispenser beforehand. → *"Cleaning the detergent drawer", Page 57*
- If you want to use both dispensers for liquid detergent, adjust the contents of the dispenser → *Page 50*.

Requirement: 💧 /❀ flashes.

1. Pull out the detergent drawer.
2. Open the dispenser lid.

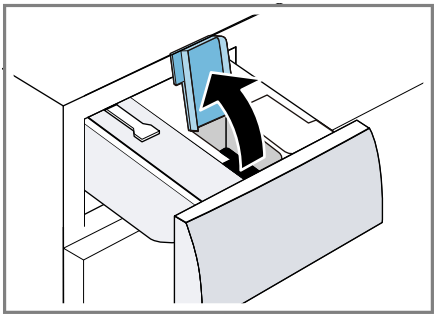

3. Pour liquid detergent 💧 and fabric softener ❀ into the relevant dispensers.
→ *"Detergent drawer", Page 19*

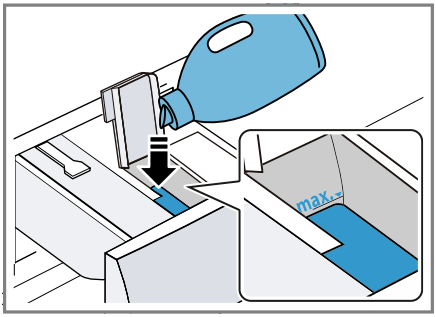

4. Close the dispenser lid.

   Note: To prevent the detergent from drying out or drying up, do not leave the dispenser lid open for a long period of time.
5. Push in the detergent drawer.
6. Adjust the basic dosage → *Page 51*.

15.2 Dispenser contents

Notes

- If you change the content of the dispenser, the basic dosage for this dispenser is reset.

- If you use both dispensers for liquid detergent, you must select a dispenser which is to be used during washing.

You can change dispenser contents in the basic settings.
→ *"Changing the basic settings", Page 56*

15.3 Basic dosage

The basic dosage depends on the manufacturer's instructions for the detergent, the water hardness and the degree of soiling of the laundry. Always set a basic dosage that corresponds to the dosage for a standard load of 4.5 kg.
→ *"Detergent dosage", Page 45*
You can individually adjust the basic dosages for each dispenser.
→ *"Changing the basic settings", Page 56*

16 Home Connect

This appliance is network-capable. Connecting your appliance to a mobile device lets you control its functions via the Home Connect app, adjust its basic settings and monitor its operating status.
The Home Connect services are not available in every country. The availability of the Home Connect function depends on the availability of Home Connect services in your country. You can find information about this at: www.home-connect.com.

- → *"Connecting the appliance to a WLAN home network (Wi-Fi) with WPS function", Page 51*
- → *"Connecting the appliance to a WLAN home network (Wi-Fi) without WPS function", Page 52*

The Home Connect app guides you through the entire login process. Follow the instructions in the Home Connect app to configure the settings.

Tips
- Please consult the documents supplied by Home Connect.
- Please also follow the instructions in the Home Connect app.

Notes
- Please note the safety precautions in this instruction manual and make sure that they are also observed when operating the appliance via the Home Connect app.
→ *"Safety", Page 4*
- Operating the appliance on the appliance itself always takes priority. During this time it is not possible to operate the appliance using the Home Connect app.

16.1 Connecting the appliance to a WLAN home network (Wi-Fi) with WPS function

Requirement: If your router has a WPS function, you can connect the appliance to your WLAN home network (Wi-Fi) automatically.

1. Press and hold **Remote Start** for approx. 3 seconds.
✔ You are now in the Home Connect menu.
2. Select **Connect**.
3. Confirm the message in the display.
4. Press the WPS button on the router within the next 2 minutes.

   Take note of the information in the documents for your router.
✔ flashes in the display.
✔ The appliance attempts to connect to your WLAN home network.

✔ If the display shows **Connected** and ⌔ lights up permanently, the appliance is connected to the home network.

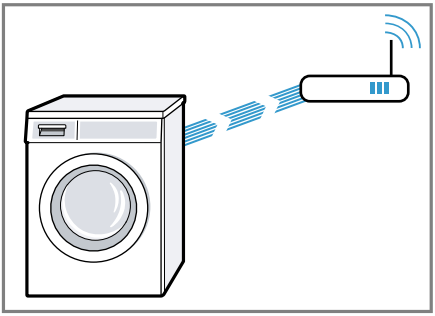

5. Connect your appliance to the Home Connect app. → *Page 53*

16.2 Connecting the appliance to a WLAN home network (Wi-Fi) without WPS function

If your router does not have a WPS function, you can connect the appliance to your WLAN home network (Wi-Fi) manually. The appliance briefly sets up its own Wi-Fi network. You can connect a mobile device to the WLAN network and transfer the network information for the WLAN home network (Wi-Fi) to your appliance.

Requirement: The Home Connect app is open and you have logged on.

1. Press and hold ⌂ **Remote Start** for at least 3 seconds.
✔ You are now in the Home Connect menu.
2. Select **Man. network log-in**.
3. Select **Connect**
4. Confirm the message in the display.
✔ ⌔ flashes in the display.
✔ The appliance now sets up its own Wi-Fi network with the name (SSID) HomeConnect.

5. Call up the Wi-Fi settings on the mobile device.

   Connect the mobile device to the HomeConnect Wi-Fi network and enter the password (key) HomeConnect.
✔ Your mobile device now connects to the appliance. The connection process may take up to 60 seconds.

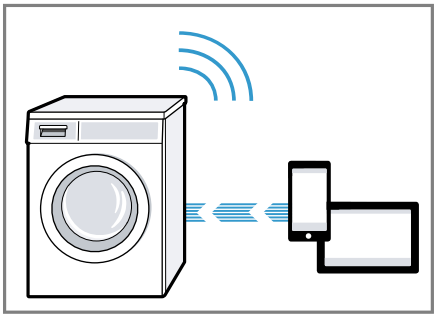

6. Open the Home Connect app on your mobile device and carry out the steps in the app.
7. In the Home Connect app, enter the network name (SSID) and password (key) for your home network.

8. Carry out the steps in the Home Connect app to connect the appliance.
✔ If the display shows **Connected** and ⌔ lights up permanently, the appliance is connected to the home network.
9. Connect your appliance to the Home Connect app → *Page 53*.

16.3 Connecting your appliance to the Home Connect app

Requirements
- The appliance is connected to the WLAN home network (Wi-Fi).
- The Home Connect app is open and you have logged on.

1. Select **Connect app**.
2. Select **Connect to the app**.
3. Confirm the message in the display.
✔ The appliance connects to the Home Connect app.
4. Once your appliance is displayed in the Home Connect app, carry out the last steps in the Home Connect app.
✔ If the display shows **Connected**, the appliance is connected to the Home Connect app.

16.4 Connecting the appliance to the energy manager

If you connect the appliance to the smart energy system (energy manager), you will optimise your energy consumption. The appliance starts only when your home photovoltaic system can provide sufficient energy or the energy tariff is good.

Requirements
- The smart energy system (energy manager) must use the EEBus Initiative communications standard.
- You have read about how to connect your appliance to the smart energy system (energy manager) in the instruction manual for the smart energy system (energy manager).

1. Press and hold **Remote Start** for approx. 3 seconds.
2. Select **energy mngmt.**.
3. Select **Connect**.
4. Confirm the message in the display.
✔ The appliance is connected to the smart energy system (energy manager)
✔ If the appliance has connected to the energy manager successfully, the display shows .
5. Activate Flex Start if you want the smart energy system (energy manager) to start up your appliance. → *"Activate Flex Start", Page 53*

Activate Flex Start

Activate Flex Start to allow your smart energy system (energy manager) to start your appliance once your home photovoltaic system is able to provide sufficient energy or the energy tariff is good.

Requirement: The smart energy system (energy manager) cannot start your appliance until it is connected to the appliance.

1. Set the programme you require.
2. Press **Finish in** to set the required time.

3. Press **Start/Reload** ▷II.
✔ The display shows **Delayed start**.
4. Press **Remote Start** .
✔ If the display shows **Flex Start**, Flex Start is activated and the appliance waits to be started by the smart energy system (energy manager).
✔ If the display changes to **: Ready in approx.**, the smart energy system (energy manager) has established a time at which your appliance can start.
✔ If the smart energy system (energy manager) does not start the appliance within the set time, the appliance will start the programme itself before the set time period ends. The programme ends when the time period ends.

Note
Flex Start is deactivated for safety reasons in the following circumstances:
- Press **Start/Reload** ▷II.
- Open the door.
- Switch off the appliance.
- Power failure.

16.5 Activating Wi-Fi on the appliance

Note: When Wi-Fi is activated, the energy consumption increases in comparison to the values specified in the consumption value table.

1. Press and hold **Remote Start** for approx. 3 seconds.
2. Select **Wi-Fi On/Off**.
3. Select **on**.
✔ Wi-Fi is activated.

Note: If Wi-Fi is activated, the appliance will not switch itself off automatically.

16.6 Deactivating Wi-Fi on the appliance

1. Press and hold **Remote Start** for at least 3 seconds.
2. Select **Wi-Fi On/Off**.
3. Select **off**.
✔ Wi-Fi is deactivated

Note: If Wi-Fi is switched off and your appliance was previously connected to your home network, this connection will be re-established automatically when Wi-Fi is switched back on.

16.7 Software update

Requirement: The display shows **A new software version is available. Do you want to update the software now? This may take several minutes.**.

1. Press and hold **Remote Start** for approx. 3 seconds.
2. Select **Software update**.
3. Select **Install now**.
✔ The software update starts.

Note: The software update may take several minutes. Do not switch off the appliance while the software update is in progress.

16.8 Resetting the appliance network settings

1. Press and hold **Remote Start** for at least 3 seconds.
2. Select **Network settings**.
3. Select **Reset**.
✔ The network settings are reset.

Tip: If you wish to operate your appliance again via the Home Connect app, you will need to reconnect it to the Wi-Fi and to the Home Connect app.

16.9 Remote diagnostics

Customer Service can use Remote Diagnostics to access your appliance if you contact them, have your appliance connected to the Home Connect server and if Remote Diagnostics is available in the country in which you are using the appliance.

Tip: For further information and details about the availability of Remote Diagnostics in your country, please visit the service/support section of your local website: www.home-connect.com

16.10 Data protection

Please see the information on data protection.
The first time your appliance is registered on a home network connected to the Internet, your appliance will transmit the following types of data to the Home Connect server (initial registration):

- Unique appliance identification (consisting of appliance codes as well as the MAC address of the Wi-Fi communication module installed).
- Security certificate of the Wi-Fi communication module (to ensure a secure data connection).
- The current software and hardware version of your appliance.
- Status of any previous reset to factory settings.

This initial registration prepares the Home Connect functions for use and is only required when you want to use the Home Connect functions for the first time.

Note: Please note that the Home Connect functions can only be utilised with the Home Connect app. Information on data protection can be retrieved in the Home Connect app.

17 Basic settings

You can configure the appliance to meet your needs.

17.1 Overview of the basic settings

Below is an overview of the basic settings on the appliance.

Basic setting	Description
end signal	Set the volume of the signal at the end of the programme.
button signal	Set the volume of the signal emitted when the buttons are pressed.
auto power-off	Deactivate the "Automatic switch-off" function for the appliance or set the time after which the appliance automatically switches itself off. → *"Save energy and conserve resources", Page 11* **Note:** If Wi-Fi is activated, the appliance will not switch itself off automatically.
Drum clean advice	Activate or deactivate the reminder to clean the drum.
Language	Set the language.

Basic setting	Description
⊔2 content	Specify the dispenser content. → *"Dispenser contents", Page 50*
⊔1 basis	Set the basic dosage. → *"Detergent dosage", Page 45*
⊔2 basis	Set the basic dosage. → *"Detergent dosage", Page 45*
Aut. network log-in	Connect the appliance to a WLAN home network (Wi-Fi) with WPS function → *Page 51*
Man. network log-in	Connect the appliance to a WLAN home network (Wi-Fi) without WPS function. → *Page 52*
Connect app	Connect your appliance to the Home Connect app → *Page 53*.
Wi-Fi On/Off	Activate or deactivate Wi-Fi. → *"Activating Wi-Fi on the appliance", Page 54* → *"Deactivating Wi-Fi on the appliance", Page 54*

Basic setting	Description
Software update	Install the software update. → *Page 54*
Network settings	Reset the network settings. → *Page 54*
energy mngmt.	Connect the appliance to the energy manager. → *Page 53*

17.2 Changing the basic settings

1. To call up the basic settings for the sub-menu, press and hold both buttons 🔧 **3 sec.** for approx. 3 seconds.
2. Select the required basic setting. → *"Overview of the basic settings", Page 55*
3. Adjust the basic setting.
4. Press 🔧 **3 sec.** to call up the main menu.

18 Cleaning and servicing

To keep your appliance working efficiently for a long time, it is important to clean and maintain it carefully.

18.1 Tips on appliance care

Wipe down the housing and the control panel with nothing but water and a damp cloth.	This ensures the parts of the appliance will remain clean and hygienic.

Remove all detergent residue, spray residue or other residues immediately.	Fresh deposits are easier to remove without leaving any residue.
Keep the appliance door and detergent drawer open after use.	This allows the residual water to dry, reducing odours in the appliance.

18.2 Cleaning the drum

⚠ **CAUTION**
Risk of injury!
Permanently washing at low temperatures and a lack of ventilation for the appliance may damage the drum and cause injury.

- Regularly run a programme for cleaning the drum or wash at temperatures of at least 60 °C.
- Leave the appliance to dry after every operation with the door open, and leave the detergent drawer to dry.

- Run the **Drum clean** programme without laundry.

  Add washing powder.

18.3 Cleaning the detergent drawer

If you change detergent or the detergent drawer is dirty, clean the detergent drawer and the pump unit of the intelligent dosing system.

Note: Please read the information in the Safety → *Page 4* and Preventing material damage → *Page 10* sections to ensure that you use the appliance safely.

1. Switch off the appliance.
2. Pull out the detergent drawer.
3. Press down on the insert and remove the detergent drawer.

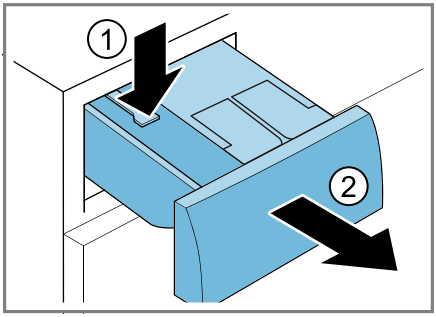

4. Remove the pump unit.

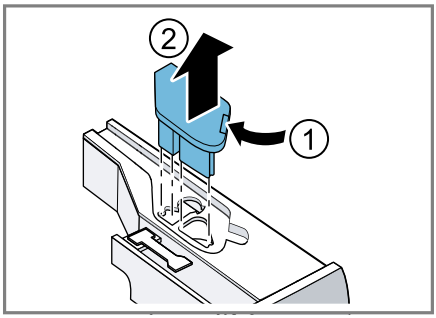

5. Unclip the detergent drawer lid and remove it.

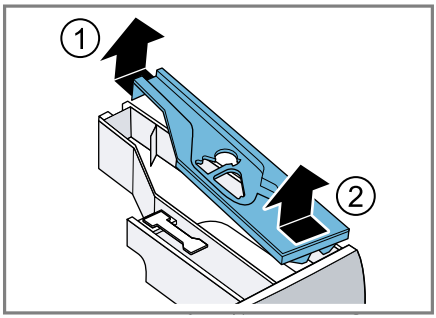

6. Empty the detergent drawer.

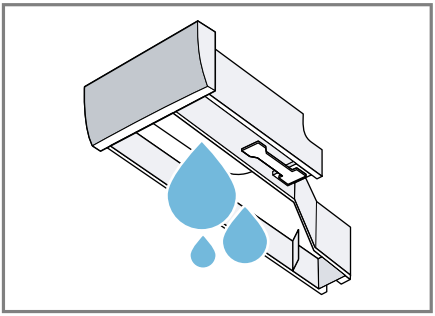

7. **ATTENTION!** The pump unit contains electrical components.
- Do not clean the pump unit in the dishwasher and do not immerse it in water.
- Protect the electrical connection on the rear against water, detergent and fabric softener residue.

  Clean the pump unit with a damp cloth.

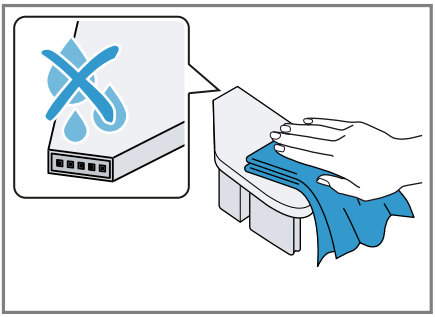

8. Clean the detergent drawer and the lid with a soft, damp cloth or hand shower.

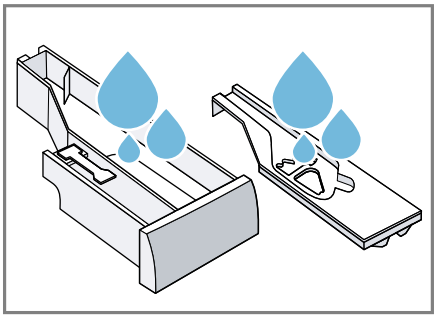

9. Dry the detergent drawer, lid and pump unit and reinsert them.

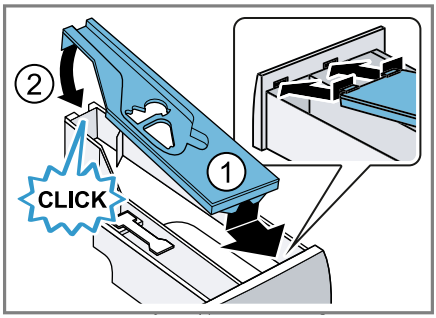

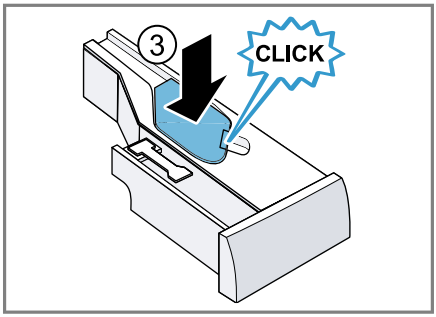

10. Clean the inside of the detergent drawer housing.

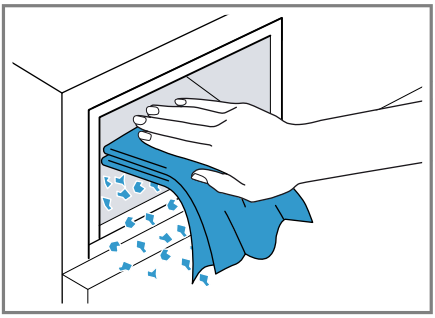

11. Push in the detergent drawer.

18.4 Descaling

ATTENTION!
The use of unsuitable descaling agents, e.g. for coffee machines, may damage the appliance.

- For this appliance, only use descaling agents that are available from the manufacturer's website or our after-sales service.

18.5 Cleaning the drain pump

Clean the drain pump in the event of faults, e.g. blockages or rattling noises.

Emptying the drain pump

Note: Please read the information in the Safety → *Page 4* and Preventing material damage → *Page 10* sections to ensure that you use the appliance safely.

1. Turn off the water tap.
2. Switch off the appliance.
3. Disconnect the appliance's mains plug from the power supply.
4. Open the maintenance flap.

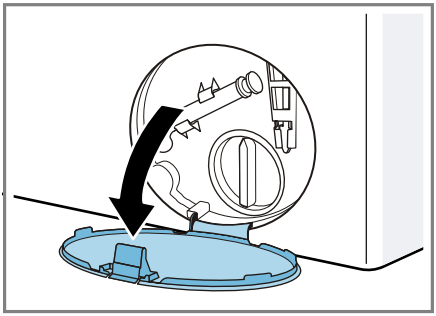

5. Remove the maintenance flap.

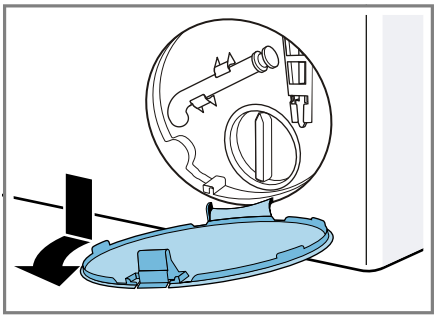

6. Slide a sufficiently large receptacle under the opening.

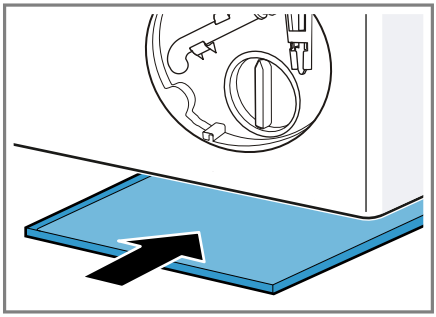

7. Take the drain hose out of the holder.

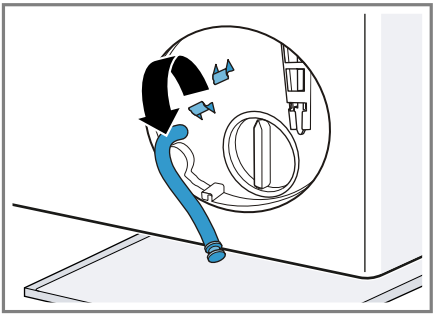

8. ⚠ **CAUTION - Risk of scalding!**
When you wash at high temperatures, the detergent solution gets hot.
- Do not touch the hot detergent solution.

To allow the detergent solution to flow out into the container, remove the sealing cap.

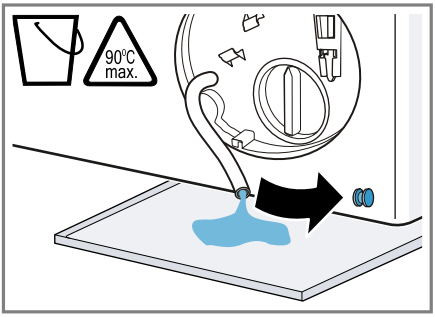

9. Firmly press on the sealing cap.

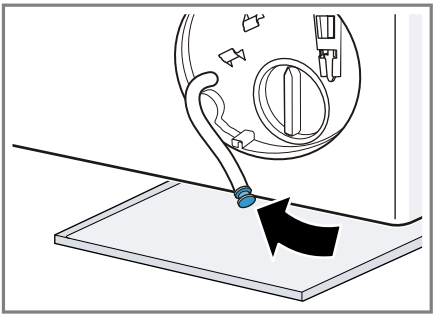

10. Insert the drain hose into the holder.

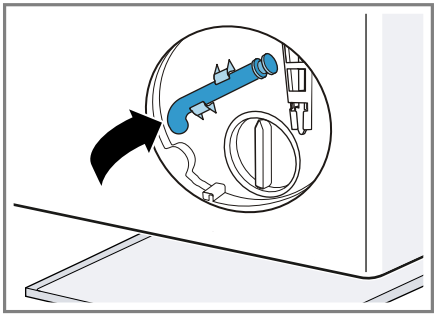

Cleaning the drain pump

Note: Please read the information in the Safety → *Page 4* and Preventing material damage → *Page 10* sections to ensure that you use the appliance safely.

Requirement: The drain pump is empty. → *Page 59*

1. Since water may remain in the drain pump, remove the pump cap carefully.

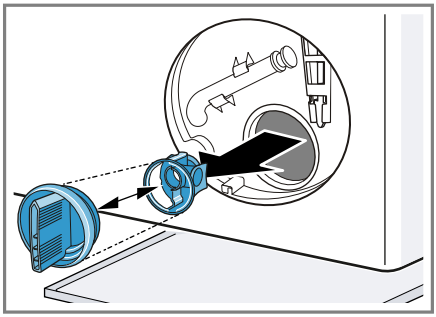

2. Clean the interior, the thread on the pump cap and the pump housing.

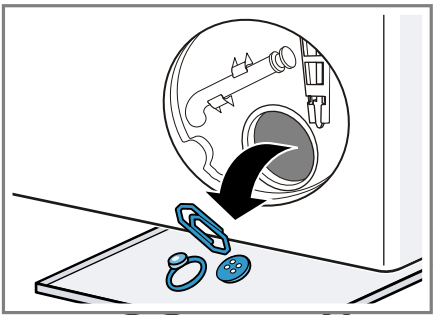

The pump cap is comprised of two parts which can be taken apart for cleaning.

3. Ensure that both impellers can turn.

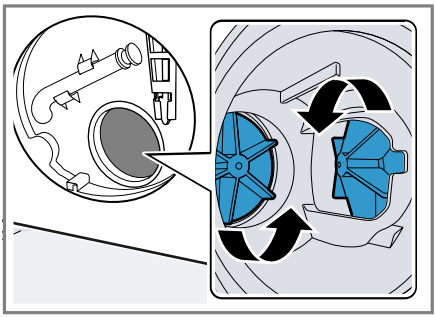

4. Insert the pump cap.
   – Ensure that the parts of the pump cap are correctly assembled.

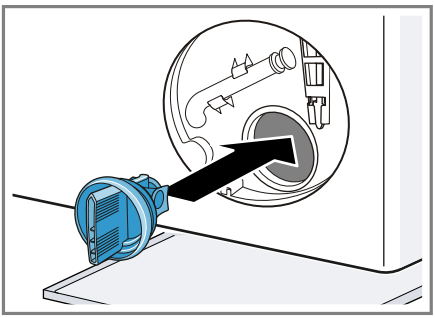

5. Insert the pump cap and screw it on as far as it will go.

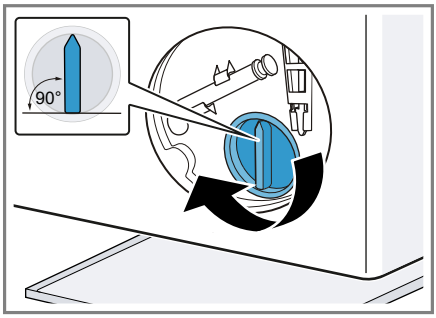

The handle on the pump cap must be in a vertical position.

6. Insert the maintenance flap and lock it into place.

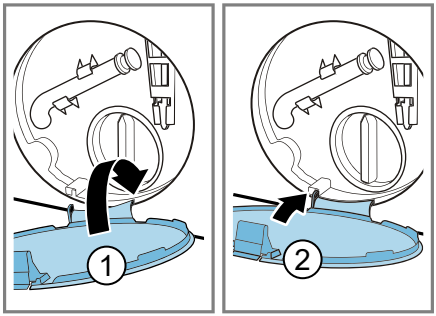

7. Close the maintenance flap.

18.6 Cleaning the intake opening in the rubber gasket

Regularly check the intake opening in the rubber gasket for any blockages and clean the intake opening.

1. Open the door.

2. Check the intake opening for blockages and remove any blockages.

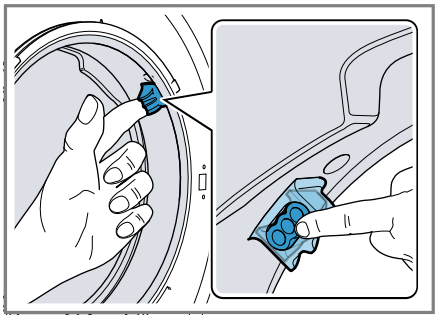

Note: Do not use any sharp or pointed objects.

18.7 Cleaning the water outlet hose at the siphon

1. Switch off the appliance.
2. Disconnect the appliance's mains plug from the power supply.
3. Loosen the hose clamp and carefully remove the water outlet hose.

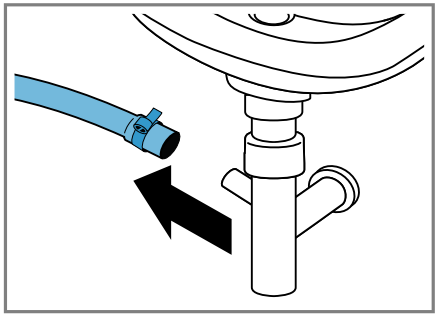

Residual water may leak out.

4. Clean the water outlet hose and siphon connecting piece.

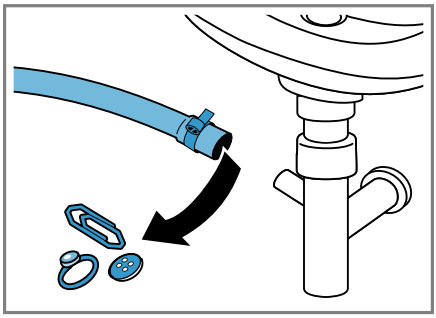

5. Reattach the water outlet hose and secure the connection point using the hose clamp.

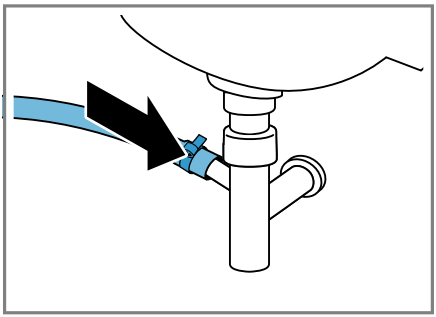

18.8 Cleaning the water inlet filter

Emptying the water inlet hose

In order to clean the filter, first empty the water inlet hose.

1. Turn off the tap.
2. Set the **Cottons** programme.
3. Start the programme and leave it to run for approx. 70 seconds.
4. Switch off the appliance.
5. Disconnect the appliance's mains plug from the power supply.

Cleaning the filter on the tap

Note: Please read the information in the Safety → *Page 4* and Preventing material damage → *Page 10* sections to ensure that you use the appliance safely.

Requirement: The water inlet hose is empty.

1. Remove the water inlet hose from the tap.

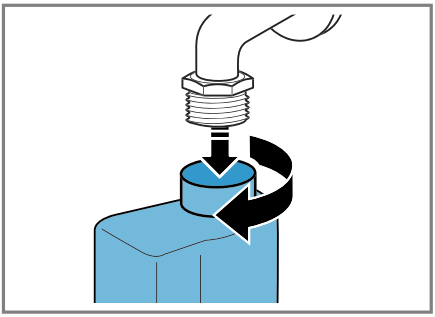

2. Clean the filter with a small brush.

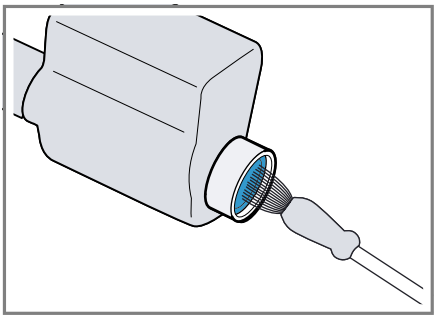

3. Connect the water inlet hose and check for leaks.

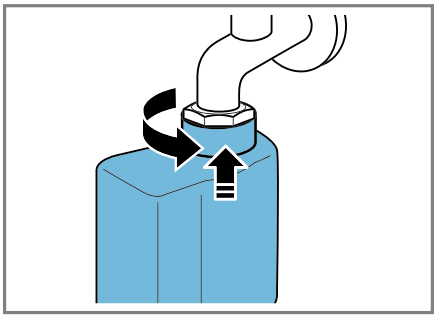

19 Troubleshooting

You can rectify minor faults on your appliance yourself. Read the troubleshooting information before contacting after-sales service. This will avoid unnecessary costs.

⚠ **WARNING**
Risk of electric shock!
Incorrect repairs are dangerous.
- Repairs to the appliance should only be carried out by trained specialist staff.
- Only use genuine spare parts when repairing the appliance.
- If the power cord of this appliance is damaged, it must be replaced by the manufacturer, the manufacturer's Customer Service or a similarly qualified person in order to prevent any risk.

Fault	Cause and troubleshooting
The display goes out and **Start/Reload** ▷II flashes.	Energy-saving mode is active ▸ Press any button. ✔ The symbol lights up again.
"E:36 / -25 / -26"	Drain pump is blocked. ▸ → *"Cleaning the drain pump", Page 59*
"E:38 / -25 / -26"	Drain pump is blocked. ▸ → *"Cleaning the drum", Page 57* if the fault is displayed again, ▸ → *"Cleaning the drain pump", Page 59*
	Inlet opening of the rubber gasket is blocked. ▸ → *"Cleaning the intake opening in the rubber gasket", Page 61*
All other error codes.	Malfunction ▸ Call the after-sales service. → *"Customer Service", Page 75*
Water cooling	To protect the wastewater pipes, the hot detergent solution is cooled before being drained. ▸ Wait until the detergent solution has cooled down.
The appliance is not working.	The mains plug of the power cord is not plugged in. ▸ Connect the appliance to the power supply.
	The circuit breaker is faulty. ▸ Check the circuit breaker in the fuse box.
	There has been a power cut. ▸ Check whether the lighting in your kitchen or other appliances are working.

Fault	Cause and troubleshooting
The programme does not start.	You have not pressed **Start/Reload** ▷II. ▸ Press **Start/Reload** ▷II.
	Door is not closed. 1. Close the door. 2. Press **Start/Reload** ▷II to start the programme.
	Childproof lock is activated. ▸ → *"Deactivating the childproof lock", Page 50*
	Finish in is activated. ▸ Check whether **Finish in** is activated. → *"Buttons", Page 25*
	Laundry is caught in the door. 1. Open the door again. 2. Remove any trapped laundry. 3. Close the door. 4. Press **Start/Reload** ▷II to start the programme.
	The detergent drawer has not been pushed in as far as it can go. ▸ Push the detergent drawer in as far as it will go.
	The pump for the intelligent dosing system is blocked. 1. Switch off the appliance. 2. Clean the pump unit. → *"Cleaning the detergent drawer", Page 57* 3. If this indicator appears again, call our after-sales service. → *"Customer Service", Page 75* **Note:** You can start the washing programme if you deactivate the intelligent dosing system and dose manually. → *"Buttons", Page 25*
The door cannot be opened.	**Rinse Hold** ▽ is activated. ▸ Continue the programme by selecting **Spin** or **Drain** and pressing **Start/Reload** ▷II. → *"Resuming the programme when the programme status is Rinse Hold", Page 49*
	The temperature is too high. ▸ Wait until the temperature has dropped. ▸ → *"Cancelling the programme", Page 48*
	Water level is too high. ▸ Start the **Drain** programme.
	Power failure.

Fault	Cause and troubleshooting
The door cannot be opened.	▸ Open the door using the emergency release. → *"Emergency release", Page 73*
The water is not draining.	Drain pipe or water outlet hose is blocked. ▸ Clean the drain pipe and the water outlet hose.
	Drain pipe or water drain hose is caught or jammed. ▸ Ensure that the drain pipe and water drain hose are not kinked or trapped.
	Drain pump is blocked. ▸ → *"Cleaning the drain pump", Page 59*
	Rinse Hold is activated. ▸ Continue the programme by selecting **Spin** or **Drain** and pressing **Start/Reload**. → *"Resuming the programme when the programme status is Rinse Hold", Page 49*
	The water outlet hose is connected too high. ▸ Install the water outlet hose at a maximum height of 1 metre.
	Pump cover is not correctly assembled. ▸ Correctly assemble the pump cover.
	Detergent dosage is too high. ▸ Immediate measure: Mix one tablespoon of fabric softener with 0.5 litres of water and pour the mixture into the compartment for manual dosing (not for outdoor clothing, sportswear or items stuffed with down). ▸ If intelligent dosing is activated, reduce the basic dosage → *Page 51*. ▸ If you dose manually, reduce the amount of detergent for the next washing cycle with the same load.
	Unapproved extension installed on the water drain hose. ▸ Remove any unapproved extensions from the water hose. Connecting the appliance
Water is not flowing in. Detergent is not being dispensed.	You have not pressed **Start/Reload**. ▸ Press **Start/Reload**.
	The filter in the water inflow is blocked. ▸ Clean the water inflow filter → *Page 62*.
	The tap is turned off. ▸ Turn on the tap.
	The water inlet hose is kinked or jammed.

Fault	Cause and troubleshooting
Water is not flowing in. Detergent is not being dispensed.	▸ Ensure that the water inlet hose is not kinked or jammed.
The spin cycle runs several times.	The unbalanced load detection system eliminates an imbalance by repeatedly redistributing the laundry. ▸ Not a fault – no action required. **Note:** When loading, where possible, place large and small items of laundry together in the drum. Different sized items of laundry distribute themselves better during the spin cycle.
The programme duration changes during the wash cycle.	The programme operation is optimised electronically. This may change the programme duration. ▸ Not a fault – no action required.
	The unbalanced load detection system eliminates an imbalance by repeatedly redistributing the laundry. ▸ Not a fault – no action required. **Note:** When loading, where possible, place large and small items of laundry together in the drum. Different sized items of laundry distribute themselves better during the spin cycle.
	Foam detection system switches on a rinse cycle if foam build-up is too high. ▸ Not a fault – no action required.
No water is visible in the drum.	Water is below the visible area. ▸ Not a fault – no action required. ▸ Do not add any extra water to the appliance while it is operating.
Drum jerks after the programme starts.	This is caused by an internal motor test. ▸ Not a fault – no action required.
Vibrations and movement of the appliance whilst spinning.	Appliance is not correctly aligned. ▸ Aligning the appliance
	The appliance feet are not fixed. ▸ Secure the appliance feet. Aligning the appliance
	Transit bolts have not been removed. ▸ Removing the transit bolts
Drum does not turn, water does not flow in.	Load detection is active. ▸ Not a fault – no action required. **Note:** The load detection can take up to two minutes.

Fault	Cause and troubleshooting
Heavy foam build-up	Detergent dosage is too high. ▸ Immediate measure: Mix one tablespoon of fabric softener with 0.5 litres of water and pour the mixture into the compartment for manual dosing (not for outdoor clothing, sportswear or items stuffed with down). ▸ If intelligent dosing is activated, reduce the basic dosage → *Page 51*. ▸ If you dose manually, reduce the amount of detergent for the next washing cycle with the same load.
i-DOS cannot be actuated.	Intelligent dosing is not intended for this programme. ▸ Not a fault – no action required.
	Programme progress does not allow intelligent dosing. No remedial action possible.
High spin speed not reached.	A low spin speed is selected. ▸ The next time you run a wash cycle, set a higher spin speed.
	Less Ironing is activated. ▸ Select the programmes that are suitable for the type of fabric. → *"Programmes", Page 29*
	Unbalance load detection system is using a reduced spin speed to eliminate an unbalance. ▸ Redistribute the laundry in the drum. **Note:** Where possible, mix large and small items in the drum. Different sized items of laundry distribute themselves better during the spin cycle. ▸ Start the **Spin** programme.
The spin programme does not start.	Drain pipe or water outlet hose is blocked. ▸ Clean the drain pipe and the water outlet hose.
	Drain pipe or water drain hose is caught or jammed. ▸ Ensure that the drain pipe and water drain hose are not kinked or trapped.
	The unbalanced load detection system has interrupted the spin cycle because the laundry is unevenly distributed. ▸ Redistribute the laundry in the drum. **Note:** Where possible, mix large and small items in the drum. Different sized items of laundry distribute themselves better during the spin cycle.

Fault	Cause and troubleshooting
The spin programme does not start.	▸ Start the **Spin** programme.
Rushing, hissing noise.	Water is flushed under pressure into the detergent drawer. ▸ Not a fault – normal operating noise.
Longer, whirring noise before the start of the wash cycle or fabric softening.	Intelligent dosing system dispenses detergent or care products. ▸ Not a fault – normal operating noise.
Brief whirring noise after switching on the appliance.	Intelligent dosing system carries out a function test. ▸ Not a fault – normal operating noise.
Loud noises during the spin cycle.	Appliance is not correctly aligned. ▸ Aligning the appliance
	The appliance feet are not fixed. ▸ Secure the appliance feet. Aligning the appliance
	Transit bolts have not been removed. ▸ Removing the transit bolts
Banging noises, rattling in the drain pump.	Foreign bodies have got into the drain pump. ▸ → *"Cleaning the drain pump", Page 59*
Slurping, rhythmical suction noise.	The drain pump is active, the detergent solution is pumped out. ▸ Not a fault – normal operating noise.
Creasing.	The spin speed is too high. ▸ The next time you run a wash cycle, set a lower spin speed.
	The load is too large. ▸ The next time you run a wash cycle, reduce the amount of laundry being loaded.
	The wrong programme is selected for the type of fabric. ▸ Select the programmes that are suitable for the type of fabric. → *"Programmes", Page 29*
The spin result is not satisfactory. The laundry is too wet/too damp.	A low spin speed is selected. ▸ The next time you run a wash cycle, set a higher spin speed. ▸ Start the **Spin** programme.
	Less Ironing is activated.

Fault	Cause and troubleshooting
The spin result is not satisfactory. The laundry is too wet/too damp.	▸ Select the programmes that are suitable for the type of fabric. → *"Programmes", Page 29*
	Drain pipe or water outlet hose is blocked. ▸ Clean the drain pipe and the water outlet hose.
	Drain pipe or water drain hose is caught or jammed. ▸ Ensure that the drain pipe and water drain hose are not kinked or trapped.
	The unbalanced load detection system has interrupted the spin cycle because the laundry is unevenly distributed. ▸ Redistribute the laundry in the drum. **Note:** Where possible, mix large and small items in the drum. Different sized items of laundry distribute themselves better during the spin cycle. ▸ Start the **Spin** programme.
	Unbalance load detection system is using a reduced spin speed to eliminate an unbalance. ▸ Redistribute the laundry in the drum. **Note:** Where possible, mix large and small items in the drum. Different sized items of laundry distribute themselves better during the spin cycle. ▸ Start the **Spin** programme.
Detergent residue on the damp washing.	Detergents may contain water-insoluble substances that deposit on the laundry. ▸ Start the **Rinse/Freshen Up** programme.
	Unsuitable detergent added to the dispenser of the intelligent dosing system. 1. Check whether the detergent used is suitable. → *"Detergents and care products", Page 44* 2. Drain the dispenser. → *"Cleaning the detergent drawer", Page 57* 3. Clean the dispenser. 4. Refill the dispenser. → *"Filling the dispenser", Page 50*
	Basic dosage is not correctly adjusted. ▸ If intelligent dosing is activated, reduce the basic dosage → *Page 51*.

Fault	Cause and troubleshooting
Detergent residue on the dry laundry.	Detergents may contain water-insoluble substances that deposit on the laundry. ▸ Brush out the laundry after washing and drying.
	Unsuitable detergent added to the dispenser of the intelligent dosing system. **1.** Check whether the detergent used is suitable. → *"Detergents and care products", Page 44* **2.** Drain the dispenser. → *"Cleaning the detergent drawer", Page 57* **3.** Clean the dispenser. **4.** Refill the dispenser. → *"Filling the dispenser", Page 50*
	Basic dosage is not correctly adjusted. ▸ If intelligent dosing is activated, reduce the basic dosage → *Page 51*.
Insufficient cleaning.	Basic dosage is not correctly adjusted. ▸ If intelligent dosing is activated, adjust the basic dosage → *Page 51* correctly.
	Detergent or care products have congealed in dispensers of the intelligent dosing system. **1.** Check whether the detergent used is suitable. → *"Detergents and care products", Page 44* **2.** Drain the dispenser. → *"Cleaning the detergent drawer", Page 57* **3.** Clean the dispenser. **4.** Refill the dispenser. → *"Filling the dispenser", Page 50*
	Unsuitable detergent added to the dispenser of the intelligent dosing system. **1.** Check whether the detergent used is suitable. → *"Detergents and care products", Page 44* **2.** Drain the dispenser. → *"Cleaning the detergent drawer", Page 57* **3.** Clean the dispenser. **4.** Refill the dispenser. → *"Filling the dispenser", Page 50*
HomeConnect is not working correctly.	Different causes are possible. ▸ Go to www.home-connect.com.
No connection to the home network.	Wi-Fi is switched off. ▸ → *"Activating Wi-Fi on the appliance", Page 54*

Fault	Cause and troubleshooting
No connection to the home network.	Wi-Fi is activated but a connection to your home network cannot be established. 1. Ensure that the home network is available. 2. Reconnect the appliance to the home network. → *"Connecting the appliance to a WLAN home network (Wi-Fi) with WPS function", Page 51* → *"Connecting the appliance to a WLAN home network (Wi-Fi) without WPS function", Page 52*
Water is leaking out at the water inlet hose.	Water inlet hose is not correctly/securely connected. 1. Connect the water supply hose correctly. Connecting the water inlet hose 2. Tighten the screw connection.
Water is leaking out at the water outlet hose.	The water outlet hose is damaged. ▸ Replace the damaged water outlet hose.
	Water outlet hose is not connected correctly. ▸ Connect the water outlet hose correctly. Water outlet connection types
Odours have formed in the appliance.	Humidity and detergent residue may promote the formation of bacteria. ▸ → *"Cleaning the drum", Page 57* ▸ If you are not using the appliance, leave the door and detergent drawer open so that residual water can evaporate.

19.1 Emergency release

Releasing the door

Requirement: The drain pump is empty. → *Page 59*

1. **ATTENTION!** Escaping water may cause material damage.
   ▸ Do not open the door if you can see water through the glass.

   Pull the emergency release downwards with a tool and release.

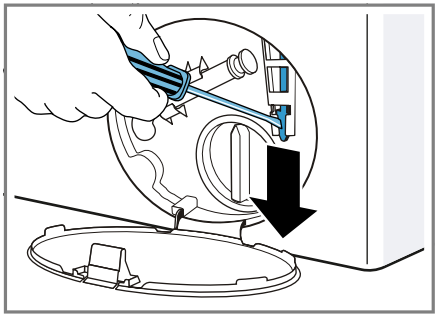

✔ The door lock is released.

2. Insert the maintenance flap and lock it into place.
3. Close the maintenance flap.

20 Transportation, storage and disposal

You can find out here how to prepare your appliance for transportation and storage. You will also find out how to dispose of old appliances.

20.1 Removing the appliance

1. Turn off the tap.
2. → *"Emptying the water inlet hose", Page 62*.
3. Switch off the appliance.
4. Unplug the appliance's mains plug.
5. Drain the remaining detergent solution.
   → *"Cleaning the drain pump", Page 59*
6. Detach the hoses.
7. Empty the dispensers.

20.2 Inserting the transit bolts

Secure the appliance for transportation using transit bolts in order to prevent damage.

1. Remove the four cover caps.
   – If necessary, use a screwdriver to remove the cover caps.

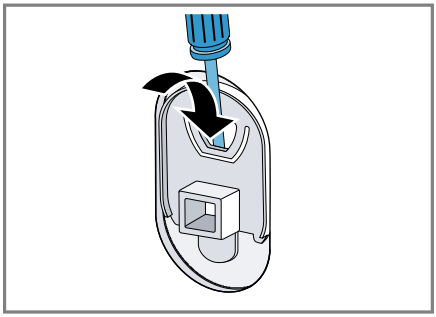

   Keep the cover caps.
2. Insert the four sleeves.

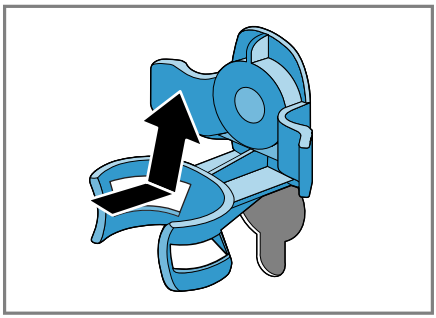

3. Insert all screws into the four transit bolts and tighten slightly.

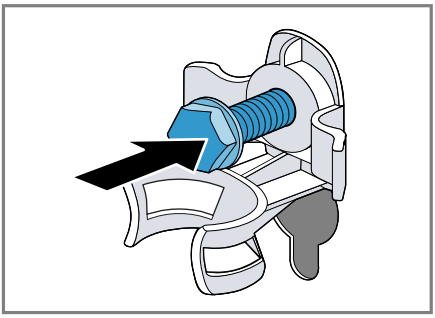

4. Insert the power cord into the holder ① and tighten all four screws for the transit bolts with a WAF 13 wrench ②.

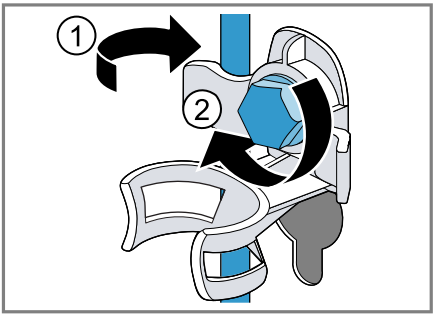

5. Insert the hose into holder.

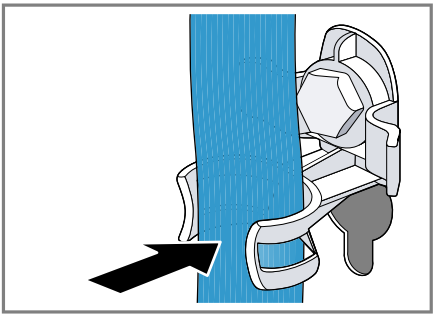

20.3 Using the appliance again

- Remove the transit bolts.

20.4 Disposing of old appliance

Valuable raw materials can be reused by recycling.

⚠ **WARNING**
Risk of harm to health!
Children can lock themselves in the appliance, thereby putting their lives at risk.

- Do not install the appliance behind a door as this may obstruct the appliance door or prevent it from opening.
- With redundant appliances, unplug the power cord. Then cut through the cord and damage the lock on the appliance door beyond repair so that the appliance door will no longer close.

1. Unplug the appliance from the mains.
2. Cut through the power cord.
3. Dispose of the appliance in an environmentally friendly manner.

   Information about current disposal methods are available from your specialist dealer or local authority.

This appliance is labelled in accordance with European Directive 2012/19/EU concerning used electrical and electronic appliances (waste electrical and electronic equipment - WEEE). The guideline determines the framework for the return and recycling of used appliances as applicable throughout the EU.

21 Customer Service

If you have any queries on use, are unable to rectify faults on the appliance yourself or if your appliance needs to be repaired, contact Customer Service.
Function-relevant genuine spare parts according to the corresponding Ecodesign Order can be obtained from Customer Service for a period of at least 10 years from the date on which your appliance was placed on the market within the European Economic Area.

Note: Under the terms of the manufacturer's warranty the use of Customer Service is free of charge.

Detailed information on the warranty period and terms of warranty in your country is available from our aftersales service, your retailer or on our website.
If you contact Customer Service, you will require the product number (E-Nr.) and the production number (FD) of your appliance.
The contact details for Customer Service can be found in the enclosed Customer Service directory or on our website.

21.1 Product number (E-Nr.) and production number (FD)

You can find the product number (E-Nr.) and the production number (FD) on the appliance's rating plate.
Depending on the model, the rating plate is located:

- On the inside of the door.
- On the inside of the maintenance flap.
- On the rear of the appliance.

Make a note of your appliance's details and the Customer Service telephone number to find them again quickly.

21.2 AQUA-STOP guarantee

In addition to warranty claims against the seller under the purchase agreement and in addition to our manufacturer's warranty, we offer compensation under the following conditions.

- If our Aqua-Stop system is defective and causes water damage, we will make good the damage for private users. To ensure protection from water damage, the appliance must be connected to the power supply.
- The liability guarantee is valid for the service life of the appliance.
- A claim can only be made under the guarantee if the appliance has been correctly installed and connected with Aqua-Stop according to our instructions; this also includes correctly fitting the Aqua-Stop extension (genuine accessory). Our guarantee does not cover defective supply lines or fittings up to the Aqua-Stop connection on the tap.
- If your appliance is fitted with Aqua-Stop, you can in principle leave your appliance unattended during operation and the tap turned on afterwards. The tap only needs to be turned off if you are away from home for a long period, e.g. on holiday for several weeks.

22 Consumption values

The following information is provided in accordance with the EU Ecodesign Regulation. The values given for programs other than the **Eco 40-60** are indicative only and were determined in accordance with the applicable standard EN60456. The automatic dosing function has been deactivated for this purpose.
Note on the comparison test: Deactivate the automatic dosing function unless this function is the object of the test.

Programme	Load (kg)	Programme duration (hr:min)[1]	Energy consumption (kWh/cycle)[1]	Water consumption (l/cycle)[1]	Maximum temperature (°C) 5 mins[1]	Spin speed (rpm)[1]	Residual moisture (%)[1]
Eco 40-60[2]	9,0	3:44	0,940	65,0	43	1400	53,00
Eco 40-60[2]	4,5	2:53	0,340	49,0	29	1400	53,00
Eco 40-60[2]	2,5	2:53	0,190	34,0	25	1400	53,00
Cottons 20 °C	9,0	3:28	0,450	93,0	24	1400	53,00
Cottons 40 °C	9,0	3:28	1,200	93,0	44	1400	53,00
Cottons 60 °C	9,0	3:34	2,000	93,0	62	1400	53,00
Cottons 40 °C + Pre-wash	9,0	3:58	1,270	100,0	44	1400	53,00
Easy Care 40 °C	4,0	2:30	0,770	56,0	43	1200	29,00
Mixed Load 40 °C	4,0	1:03	0,640	43,0	41	1400	52,00
Wool 30 °C	2,0	0:41	0,200	40,0	24	800	32,00

[1] Due to the influence of water pressure, hardness and inlet temperature, ambient temperature, type, amount and soiling of laundry, detergent used, fluctuations in the power supply and the selected additional functions, the actual values may deviate from the stated values.
[2] Test programme in accordance with the EU Ecodesign Directive and the EU Energy Labelling Regulation with cold water (15 °C).

23 Technical specifications

Facts and figures for your appliance can be found here.

Appliance height	85,0 cm
Appliance width	60,0 cm
Appliance depth	64,0 cm
Weight	73 kg[1]
Maximum load	9 kg
Mains voltage	220 - 240 V, 50 Hz
⊟ Minimum installation protection	10 A
Rated power	2300 W
Power consumption	▪ Off mode: 0,10 W ▪ Left-on mode: 0,50 W ▪ Time until the networked standby mode is set (Wi-Fi): 5 Min. ▪ Networked standby mode (Wi-Fi): 1,50 W
Water pressure	▪ Minimum: 100 kPa (1 bar) ▪ Maximum: 1000 kPa (10 bar)
Length of the water inlet hose	150 cm
Length of the water outlet hose	150 cm
Length of the power cord	210 cm

[1] Depending on the appliance specifications

This product contains light sources from energy efficiency class F. These light sources are available as a spare part and must only be replaced by trained specialist staff.
More information about your model can be found online at https://energylabel.bsh-group.com[1]. This web address is linked to the official EU EPREL product database. At the time of printing its web address had not yet been published. Please then follow the instructions on searching for models. The model identifier is made up of the characters before the slash in the product number (E-Nr.) on the rating plate. Alternatively you can also find the model identifier in the first line of the EU energy label.

24 Declaration of Conformity

Robert Bosch Hausgeräte GmbH hereby declares that the appliance with Home Connect functionality meets the essential requirements and other relevant provisions of the Directive 2014/53/EU.
A detailed RED Declaration of Conformity can be found online at www.bosch-home.com among the additional documents on the product page for your appliance.

CE

2.4 GHz band: 100 mW max.
5 GHz band: 100 mW max.

[1] Only applies to countries in the European Economic Area

BE	BG	CZ	DK	DE	EE	IE	EL
ES	FR	HR	IT	CY	LV	LT	LU
HU	MT	NL	AT	PL	PT	RO	SI
SK	FI	SE	UK	NO	CH	TR	

5 GHz WLAN (Wi-Fi): For indoor use only.

Thank you for buying a Bosch Home Appliance!

Register your new device on MyBosch now and profit directly from:

- **Expert tips & tricks for your appliance**
- **Warranty extension options**
- **Discounts for accessories & spare-parts**
- **Digital manual and all appliance data at hand**
- **Easy access to Bosch Home Appliances Service**

Free and easy registration – also on mobile phones:
www.bosch-home.com/welcome

Looking for help? You'll find it here.

Expert advice for your Bosch home appliances, help with problems or a repair from Bosch experts.
Find out everything about the many ways Bosch can support you:
www.bosch-home.com/service
Contact data of all countries are listed in the attached service directory.

Robert Bosch Hausgeräte GmbH
Carl-Wery-Straße 34
81739 München
GERMANY
www.bosch-home.com

Valid within Great Britain:
Imported to Great Britain by
BSH Home Appliances Ltd.
Grand Union House
Old Wolverton Road
Wolverton, Milton Keynes
MK12 5PT
United Kingdom

9001599859 (010224)
en